GATCO®

TIMELESS & TRUSTED

ULTIMATE FINE BATHWARE

2026 - 2027

Elevate the Everyday

Designed to Be Seen, Built to Endure.

Born in San Francisco in 1977, GATCO was founded on the belief that everyday details deserve extraordinary care. What began as a small studio with a passion for design has evolved into a national brand trusted by interior designers, architects, and builders to bring thoughtful form and lasting function into the bath space.

This catalog showcases our latest collections, signature finishes, and timeless pieces, each designed to bring harmony, functionality, and style to every space.

Welcome to the 2026 - 2027 GATCO Catalog.

GATCO®

FINE BATHWARE


San Francisco born,
crafting luxury bath hardware
since 1977–

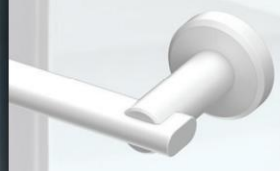
LOCKE 1


BEVERLY 3


CLARION / REVEAL 5


GIBSON 7


GLAM TOO 9


GLAM 11


LATITUDE² 17


SKY 25


CHANNEL 27

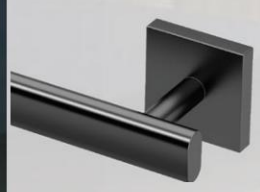
ELEVATE 29


A-LINE 35


MODE 38

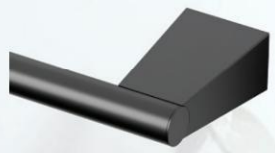
BLEU 41


WATERLINE 45


TAVERN 49


CAFÉ 53


DESIGNER II 55


LIZZIE 59


STUDIO 61

TABLE OF CONTENTS

COMBINATIONS by GATCO

COMBINATIONS 63

CRYSTAL CLEAR ACRYLIC 65

MATTE WHITE 67

WASTEBASKETS 69

FASHION GRAB BARS 73

SHOWER 77

COUNTERTOP 80

FREESTANDING essentials 81

all modern DÉCOR Hooks 84

SPA 85

MORE essentials 88

LIGHTING 89

FLUSH MOUNT MIRRORS 93

FIXED MOUNT MIRRORS 97

PIVOTING MIRRORS 99

COSMETIC MIRRORS 101

NEW

LOCKE



Chrome



Satin Nickel



Matte Black



Polished Nickel



Matte White





24 in. Towel Bar

Oval tubing

5450	Chrome
5460	Satin Nickel
5450MX	Matte Black
5470	Polished Nickel
5480	Matte White





18 in. Towel Bar

Oval tubing

5451	Chrome
5461	Satin Nickel
5451MX	Matte Black
5471	Polished Nickel
5481	Matte White



Towel Ring

6½" dia.

5452	Chrome
5462	Satin Nickel
5452MX	Matte Black
5472	Polished Nickel
5482	Matte White



Tissue Holder

Euro style, 6¾" L.

5453	Chrome
5463	Satin Nickel
5453MX	Matte Black
5473	Polished Nickel
5483	Matte White



Robe Hook

2½" H.

5455	Chrome
5465	Satin Nickel
5455MX	Matte Black
5475	Polished Nickel
5485	Matte White

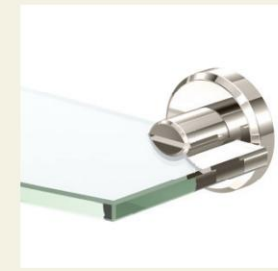



Glass Shelf

20⅛" L., 5⅜" D.

8mm Tempered glass

5456	Chrome
5466	Satin Nickel
5456MX	Matte Black
5476	Polished Nickel
5486	Matte White

MATCHING FASHION GRAB BARS

GATCO Grab Bars meet all Americans with Disabilities Act (ADA) & ASTM guidelines

Stainless Steel

Universal fastening system

Compatible with 45° installation

Oval tubing

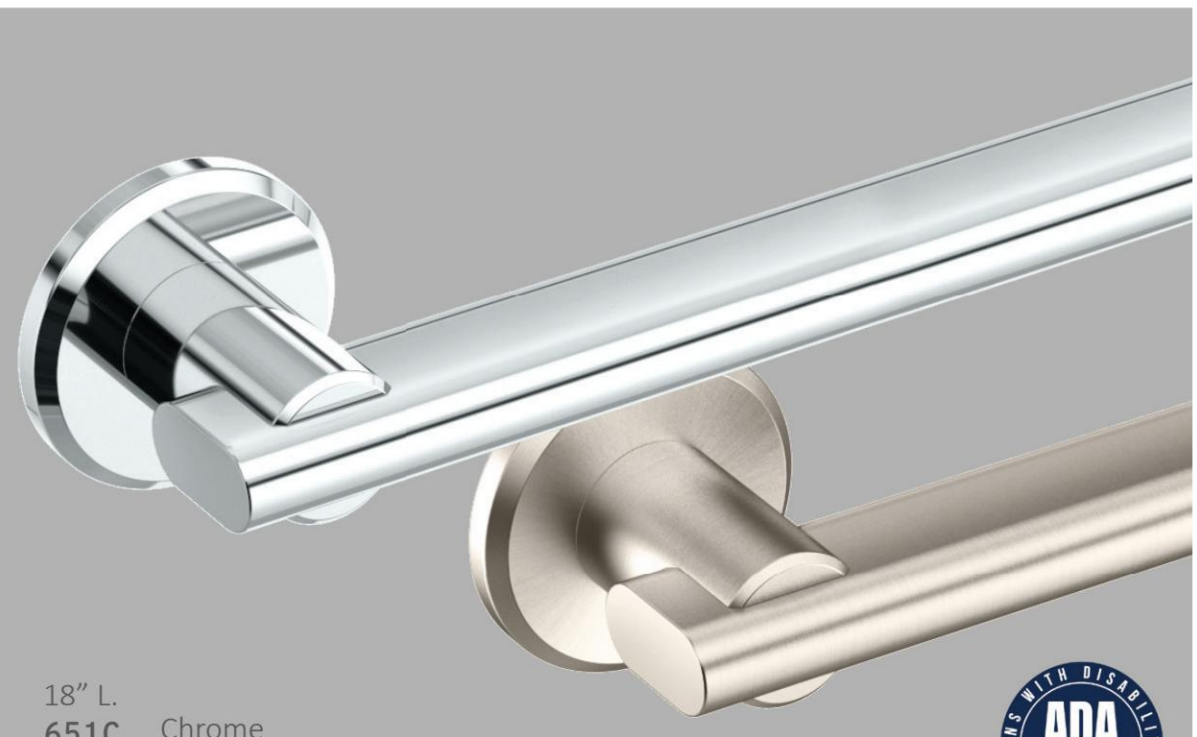

36" L.		24" L.		18" L.	
654C	Chrome	**652C**	Chrome	**651C**	Chrome
654SN	Satin Nickel	**652SN**	Satin Nickel	**651SN**	Satin Nickel
654MX	Matte Black	**652MX**	Matte Black	**651MX**	Matte Black

All designs are patented and the exclusive property of GATCO®, Inc.

NEW



BEVERLY





24 in. Towel Bar

Oval tubing

5510 Chrome
5510SN Satin Nickel
5510PN Polished Nickel



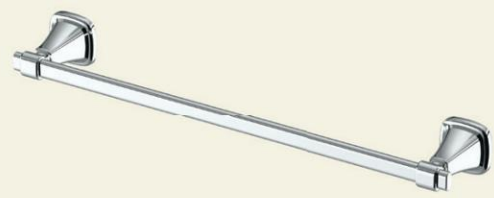

18 in. Towel Bar

Oval tubing

5511 Chrome
5511SN Satin Nickel
5511PN Polished Nickel



Chrome



Towel Ring

6¼" W.

5512 Chrome
5512SN Satin Nickel
5512PN Polished Nickel



Tissue Holder

Euro style, 6¾" W.

5513 Chrome
5513SN Satin Nickel
5513PN Polished Nickel



Satin Nickel



Robe Hook

2⅛" W.

5515 Chrome
5515SN Satin Nickel
5515PN Polished Nickel



3-Tier Rectangle Taboret

28¼" H.

1351 Chrome
1352 Satin Nickel
1351PN Polished Nickel NEW



Polished Nickel

All designs are patented and the exclusive property of GATCO®, Inc.

NEW

CLARION
Crystal Clear Acrylic®





24 in. Towel Bar
¾" dia. tubing

5710 Chrome
5720 Polished Nickel
5730 Brushed Brass





18 in. Towel Bar
¾" dia. tubing

5711 Chrome
5721 Polished Nickel
5731 Brushed Brass



Chrome &
Crystal Clear Acrylic®



Towel Ring
6½" dia.

5712 Chrome
5722 Polished Nickel
5732 Brushed Brass



Tissue Holder
Euro style, 7⅛" W.

5713 Chrome
5723 Polished Nickel
5733 Brushed Brass



Polished Nickel &
Crystal Clear Acrylic®



Robe Hook
2½" H.

5715 Chrome
5725 Polished Nickel
5735 Brushed Brass



Countertop Hand Towel Holder
11⅛" H.

1344C Chrome
1344SN Satin Nickel
1344B Brushed Brass
1344PN Polished Nickel



Brushed Brass &
Crystal Clear Acrylic®
Solid Brass construction

All designs are patented and the exclusive property of GATCO®, Inc.



REVEAL



Chrome



Satin Nickel



Matte Black





24 in. Towel Bars

¾" dia. tubing

4660	Chrome
4670	Satin Nickel
4660MX	Matte Black





18 in. Towel Bars

¾" dia. tubing

4661	Chrome
4671	Satin Nickel
4661MX	Matte Black





Double Towel Bars

24" L.

4664	Chrome
4674	Satin Nickel
4664MX	Matte Black

All designs are patented and the exclusive property of Gatco®, Inc.



Towel Rings
6½" dia.

4662	Chrome
4672	Satin Nickel
4662MX	Matte Black



Tissue Holders
Euro Style, 6⅝" L.

4663	Chrome
4673	Satin Nickel
4663MX	Matte Black



Robe Hooks
2½" H.

4665	Chrome
4675	Satin Nickel
4665MX	Matte Black

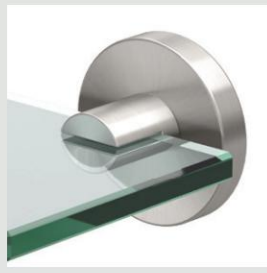



Glass Shelves
20⅛" L., 5½" D.
8mm Tempered Glass

4666	Chrome
4676	Satin Nickel
4666MX	Matte Black

FRAMED PIVOTING MIRRORS

PIVOTS







Framed Large Rectangle
24½" W. × 32½" H.

4669FS	Chrome
4679FS	Satin Nickel
4669MXFS	Matte Black

Framed Rectangle
20½" W. × 25" H.

4669XFSM	Matte Black

Framed Large Oval
25" W. × 33" H.

4669XFLG	Matte Black

Framed Oval
20½" W. × 27½" H.

4669MXF	Matte Black

PIVOTING FRAMELESS MIRRORS

PIVOTS







Frameless Large Rectangle
23½" W. × 31½" H.

4669S	Chrome
4679S	Satin Nickel
4669MXS	Matte Black

Frameless Rectangle
19½" W. × 24" H.

4669SM	Chrome
4679SM	Satin Nickel
4669MXSM	Matte Black

Frameless Large Oval
24" W. × 32" H.

4669LG	Chrome
4679LG	Satin Nickel
4669MXLG	Matte Black

Frameless Oval
19½" W. × 26½" H.

4669	Chrome
4679	Satin Nickel
4669MX	Matte Black

The dimensions reflect the size of the mirror, and do not include the mounting brackets

NEW

GIBSON



Chrome



Satin Nickel



Matte Black





24 in. Towel Bar

⅞" dia. tubing

5210	Chrome
5210SN	Satin Nickel
5210MX	Matte Black





18 in. Towel Bar

⅞" dia. tubing

5211	Chrome
5211SN	Satin Nickel
5211MX	Matte Black



Towel Ring

6⅝" dia.

5212	Chrome
5212SN	Satin Nickel
5212MX	Matte Black



Tissue Holder

Euro style, 6½" L.

5213	Chrome
5213SN	Satin Nickel
5213MX	Matte Black



Robe Hook

2" H.

5215	Chrome
5215SN	Satin Nickel
5215MX	Matte Black

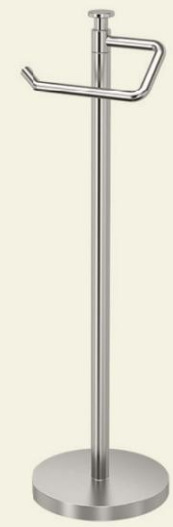

Tissue Holder

23⅝" H.

1435C	Chrome	
1435SN	Satin Nickel	
1435BZ	Bronze	
1435PN	Polished Nickel	NEW

MATCHING FASHION GRAB BARS

GATCO Grab Bars meet all Americans with Disabilities Act (ADA) & ASTM guidelines
Stainless Steel
Universal fastening system
Compatible with 45° installation
1¼" dia. tubing



36" L.		24" L.		18" L.	
624C	Chrome	**622C**	Chrome	**621C**	Chrome
624SN	Satin Nickel	**622SN**	Satin Nickel	**621SN**	Satin Nickel
624MX	Matte Black	**622MX**	Matte Black	**621MX**	Matte Black

All designs are patented and the exclusive property of GATCO®, Inc.



GLAM TOO



Chrome



Satin Nickel

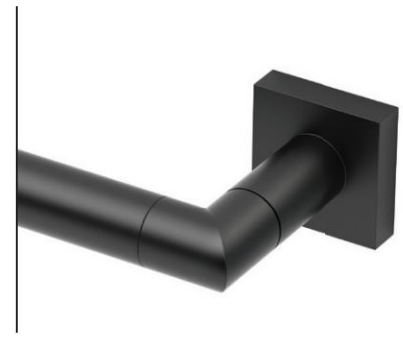

Matte Black





30 in. Towel Bar

⅞" dia. tubing

5630A	Chrome
5640A	Satin Nickel
5630AMX	Matte Black





24 in. Towel Bar

⅞" dia. tubing

5630	Chrome
5640	Satin Nickel
5630MX	Matte Black





18 in. Towel Bar

⅞" dia. tubing

5631	Chrome
5641	Satin Nickel
5631MX	Matte Black



Towel Ring

5¾" W.

5632	Chrome
5642	Satin Nickel
5632MX	Matte Black



Tissue Holder

Euro style, 6⅝" L.

5633	Chrome
5643	Satin Nickel
5633MX	Matte Black



Tissue Holder

1¾" H.

5633B	Chrome
5643B	Satin Nickel
5633BMX	Matte Black



Robe Hook

1¾" H.

5635	Chrome
5645	Satin Nickel
5635MX	Matte Black

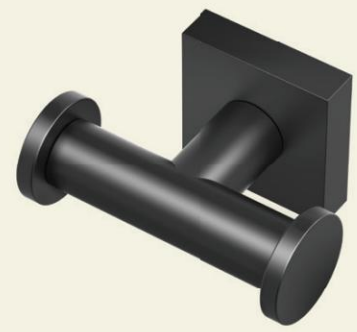

Double Robe Hook

1¾" H.

5635A	Chrome
5645A	Satin Nickel
5635AMX	Matte Black

SQUARE



Square Wastebasket

Stainless Steel

11⅞ H., 8" W., Capacity 3 gal

1913	Chrome
1914	Satin Nickel
1915	Matte Black
1913B	Brushed Brass
1934	Matte Black & Brushed Brass

See more finishes on page 72

MATCHING FASHION GRAB BARS

GATCO Grab Bars meet all Americans with Disabilities Act (ADA) & ASTM guidelines

Stainless Steel

Universal fastening system

Compatible with 45° installation

1¼" dia. tubing

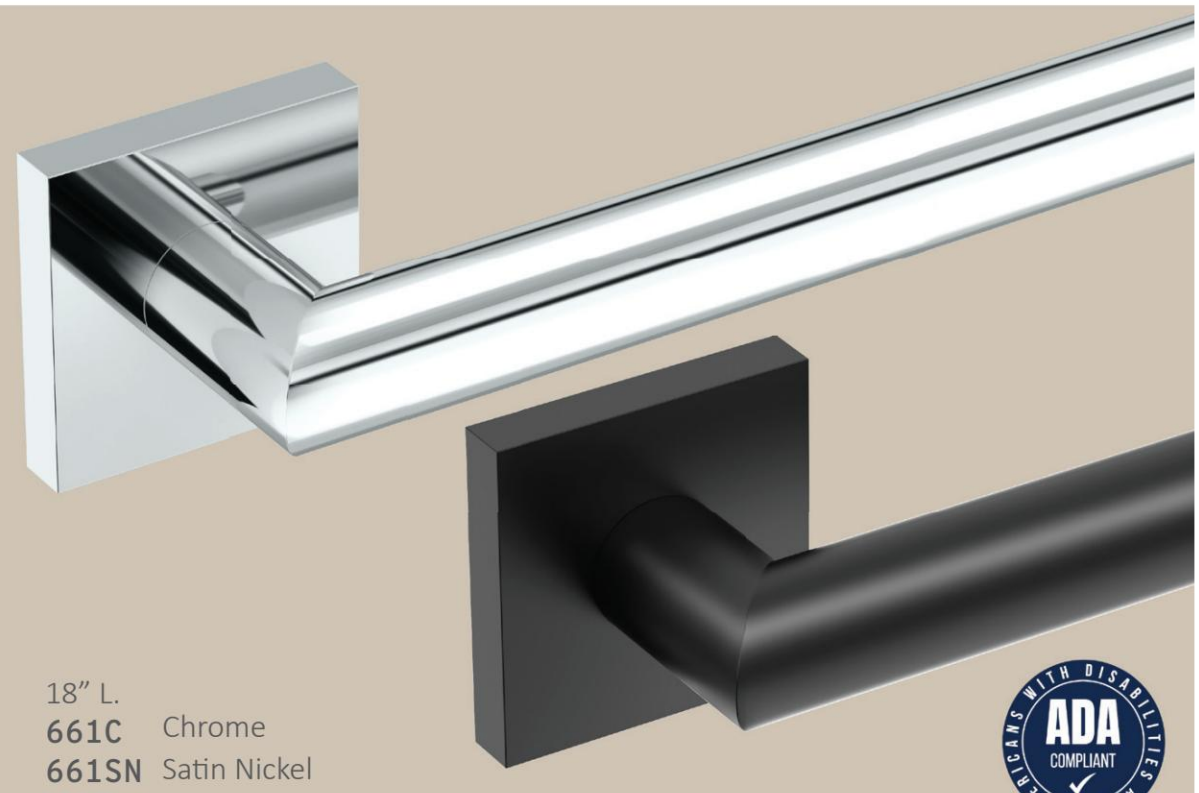

36" L.		24" L.		18" L.	
664C	Chrome	**662C**	Chrome	**661C**	Chrome
664SN	Satin Nickel	**662SN**	Satin Nickel	**661SN**	Satin Nickel
664MX	Matte Black	**662MX**	Matte Black	**661MX**	Matte Black

All designs are patented and the exclusive property of GATCO®, Inc.



G L A M





24 in. Towel Bar

⅞" dia. tubing

4630	Chrome
4640	Satin Nickel
4630MX	Matte Black
4310	Polished Nickel

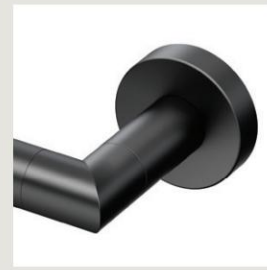



18 in. Towel Bar

⅞" dia. tubing

4631	Chrome
4641	Satin Nickel
4631MX	Matte Black
4311	Polished Nickel



Chrome





Double Towel Bar

24" L.

4634	Chrome
4644	Satin Nickel
4634MX	Matte Black
4314	Polished Nickel



Towel Ring

6½" dia.

4632	Chrome
4642	Satin Nickel
4632MX	Matte Black
4312	Polished Nickel



Satin Nickel





Tissue Holder

Euro style, 6¾" L.

4633	Chrome
4643	Satin Nickel
4633MX	Matte Black
4313	Polished Nickel

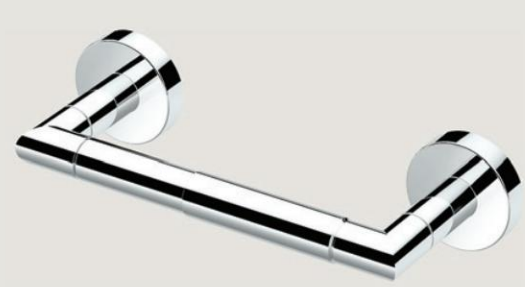

Tissue Holder

Traditional style, 2" H.

4633B	Chrome
4643B	Satin Nickel
4633BMX	Matte Black
4313B	Polished Nickel



Matte Black

Polished Nickel

All designs are patented and the exclusive property of GATCO®, Inc.



Double Tissue Holder

Holds up to 2 rolls, 14" L.

4633A	Chrome
4643A	Satin Nickel
4633AMX	Matte Black
4313A	Polished Nickel



Tissue Storage Holder

6¾" H.

4638	Chrome
4648	Satin Nickel
4638MX	Matte Black
4318	Polished Nickel



Robe Hook

2" H.

4635	Chrome
4645	Satin Nickel
4635MX	Matte Black
4315	Polished Nickel



Double Robe Hook

2" H.

4635A	Chrome
4645A	Satin Nickel
4635AMX	Matte Black
4315A	Polished Nickel

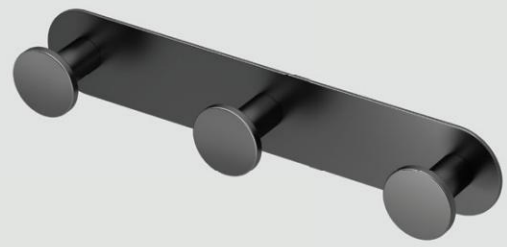

All Modern Décor Hook

Triple 11" L.

1282	Chrome
1286	Satin Nickel
1282MX	Matte Black
1282B	Brushed Brass (Solid Brass)



All Modern Décor Hook

Double 6½" L.

1281	Chrome
1285	Satin Nickel
1281MX	Matte Black
1281B	Brushed Brass (Solid Brass)



All Modern Décor Hook

Triple 11" L.

1288	Chrome
1288SN	Satin Nickel
1288MX	Matte Black
1288B	Brushed Brass (Solid Brass)



All Modern Décor Hook

Double 6½" L.

1284	Chrome
1284SN	Satin Nickel
1284MX	Matte Black
1284B	Brushed Brass (Solid Brass)



Glass Shelf

20⅛" L., 5½" D.,
8mm Tempered glass

4636	Chrome
4646	Satin Nickel
4636MX	Matte Black
4316	Polished Nickel

MATCHING FASHION GRAB BARS



GATCO Grab Bars meet all Americans with Disabilities Act (ADA) & ASTM guidelines
Stainless Steel, Universal fastening system
Compatible with 45° installation, 1¼" dia. tubing

54" L. NEW
968A Chrome
978A Satin Nickel
968AMX Matte Black

30" L. NEW
966A Chrome
976A Satin Nickel
966AMX Matte Black

48" L. NEW
986A Chrome
987A Satin Nickel
986AMX Matte Black

24" L.
964 Chrome
974 Satin Nickel
964MX Matte Black NEW
964W Matte White NEW

42" L.
968 Chrome
978 Satin Nickel
968MX Matte Black NEW

18" L.
962 Chrome
972 Satin Nickel
962MX Matte Black NEW
962W Matte White NEW

36" L.
966 Chrome
976 Satin Nickel
966MX Matte Black NEW

12" L.
960 Chrome
970 Satin Nickel
960MX Matte Black NEW



All designs are patented and the exclusive property of GATCO®, Inc.



Modern Shower Rod

1” dia. tubing, 60” L.



829C Chrome
829SN Satin Nickel
829MX Matte Black

- Solid Brass construction
- Curtain rings not included

Modern Curved Shower Rod

1” dia. tubing



827C Chrome
827SN Satin Nickel
827MX Matte Black



- Stainless Steel
- Expands space by up to 8in.
- Length adjusts between 42”- 72”
- Curtain rings not included

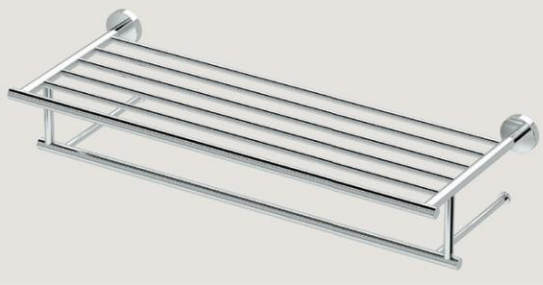

Minimalist Towel Rack

Stainless Steel
25¾” L., 5¼” H.

4637 Chrome
4647 Satin Nickel



Round Wastebasket

Stainless Steel
11⅞” H., 7⅝” dia. Capacity 2.9 gal

1910 Chrome
1911 Satin Nickel
1912 Matte Black
1910B Brushed Brass
1930 Matte Black & Brushed Brass

See more finishes on page 70



Table Mirror

Solid Brass construction
3x Magnification on one side
8¾” H. 7½” dia.

1391MX Matte Black

PIVOTING FRAMELESS MIRRORS

PIVOTS



Frameless
Large Rectangle
23½" W. × 31½" H.

4639S	Chrome
4649S	Satin Nickel
4639MXS	Matte Black
4319S	Polished Nickel



Frameless Rectangle
19½" W. × 24" H.

4639SM	Chrome
4649SM	Satin Nickel
4639MXSM	Matte Black
4319SM	Polished Nickel



Frameless Large Oval
24" W. × 32" H.

4639LG	Chrome
4649LG	Satin Nickel
4639MXLG	Matte Black
4319LG	Polished Nickel

Frameless Oval
19½" W. × 26½" H.

4639	Chrome
4649	Satin Nickel
4639MX	Matte Black
4319	Polished Nickel

FRAMED PIVOTING MIRRORS

PIVOTS



Framed
Large Rectangle
24½" W. × 32½" H.

4639FS	Chrome
4649FS	Satin Nickel
4639MXFS	Matte Black



Framed Rectangle
20½" W. × 25" H.

4639XFSM	Matte Black



Framed Large Oval
25" W. × 33" H.

4639XFLG	Matte Black

Framed Oval
20½" W. × 27½" H.

4639MXF	Matte Black

All GATCO sconces are UL listed and require medium base bulb(s)
Sconces may be mounted upward or downward



Triple Sconce
19½" L.

1636	Chrome
1637	Satin Nickel
1636MX	Matte Black



Double Sconce
12⅝" L.

1633	Chrome
1634	Satin Nickel
1633MX	Matte Black



Single Sconce
5" L.

1630	Chrome
1631	Satin Nickel
1630MX	Matte Black

The dimensions reflect the size of the mirror, and do not include the mounting brackets



LATITUDE²





30 in. Towel Bar
¾" dia. tubing

4240A	Chrome
4290A	Satin Nickel
4240AMX	Matte Black
4230A	Brushed Brass





24 in. Towel Bar
¾" dia. tubing

4240	Chrome
4290	Satin Nickel
4240MX	Matte Black
4230	Brushed Brass



Chrome





18 in. Towel Bar
¾" dia. tubing

4241	Chrome
4291	Satin Nickel
4241MX	Matte Black
4231	Brushed Brass

NEW





12 in. Towel Bar
¾" dia. tubing

4241A	Chrome
4291A	Satin Nickel
4241MXA	Matte Black



Satin Nickel



Matte Black

NEW



8 in. Towel Holder
¾" dia. tubing

4241B	Chrome
4291B	Satin Nickel
4241MXB	Matte Black





Double Towel Bar
24" L.

4244	Chrome
4294	Satin Nickel
4244MX	Matte Black
4234	Brushed Brass



Brushed Brass
Solid Brass construction

All designs are patented and the exclusive property of GATCO®, Inc.



Towel Ring

6½"W.

4242	Chrome
4292	Satin Nickel
4242MX	Matte Black
4232	Brushed Brass



Tissue Holder

Euro style, 6⅞" L.

4243	Chrome
4293	Satin Nickel
4243MX	Matte Black
4233	Brushed Brass



Tissue Holder

Traditional style, 2" H.

4243B	Chrome
4293B	Satin Nickel
4243BMX	Matte Black
4233B	Brushed Brass NEW



Double Tissue Holder

Holds up to 2 rolls, 14" L.

4243A	Chrome
4293A	Satin Nickel
4243AMX	Matte Black



Tissue Holder with Mobile Shelf

7" W., 4" D.

1420	Chrome
1420SN	Satin Nickel
1420MX	Matte Black
1420B	Brushed Brass
1420MXB	Matte Black & Brushed Brass NEW



Tissue Storage Holder

6⅞" H.

4248	Chrome
4298	Satin Nickel
4248MX	Matte Black



Tissue Holder

21¼" H.

1431C	Chrome
1431SN	Satin Nickel
1431MX	Matte Black
1431B	Brushed Brass
1431W	Matte White NEW
1431PN	Polished Nickel NEW
1431MXB	Brushed Brass & Matte Black NEW



Tissue Holder with Storage

21⅛" H. Holds up to 4 tissue rolls

1443C	Chrome
1443SN	Satin Nickel
1443B	Brushed Brass



Tissue Holder

22¼" H.

1437C	Chrome
1437SN	Satin Nickel
1437MX	Matte Black
1437PN	Polished Nickel NEW



Tissue Holder with Storage

22¼" H.

Holds up to 4 tissue rolls

1448C Chrome
1448SN Satin Nickel



Robe Hook

2¼" H.

4245 Chrome
4295 Satin Nickel
4245MX Matte Black
4235 Brushed Brass



Double Robe Hook

2" H.

4245A Chrome
4295A Satin Nickel
4245AMX Matte Black



All Modern Décor Hooks

Triple 11" L.

1292 Chrome
1296 Satin Nickel
1292MX Matte Black
1292B Brushed Brass
1292MXB Brushed Brass & Matte Black NEW



All Modern Décor Hooks

Double 6½" L.

1291 Chrome
1295 Satin Nickel
1291MX Matte Black
1291B Brushed Brass
1291MXB Brushed Brass & Matte Black NEW





Glass Shelf

20⅛" L., 5½" D.

8mm Tempered glass

4246 Chrome
4296 Satin Nickel
4246MX Matte Black
4236 Brushed Brass

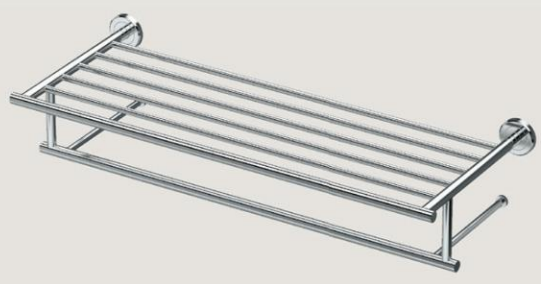

Minimalist Towel Rack

Stainless Steel

25¾" L., 5¼" H.

4247 Chrome
4297 Satin Nickel
4247MX Matte Black

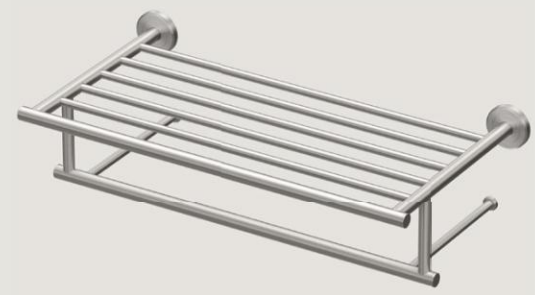

Minimalist Towel Rack

Stainless Steel

19¾" L., 5¼" H.

1818C Chrome
1818SN Satin Nickel
1818MX Matte Black





Paper Towel Holder

15½" L.

1433C Chrome
1433SN Satin Nickel
1433MX Matte Black

All designs are patented and the exclusive property of GATCO®, Inc.





MATCHING FASHION GRAB BARS

GATCO Grab Bars meet all Americans with Disabilities Act (ADA) & ASTM guidelines
Stainless Steel,Universal fastening system
Compatible with 45° installation, 1¼" dia. tubing

54" L.

858A	Chrome
859A	Satin Nickel
858AMX	Matte Black NEW

30" L.

856A	Chrome
857A	Satin Nickel
856AMX	Matte Black

48" L.

896	Chrome
897	Satin Nickel
896MX	Matte Black

24" L.

854	Chrome
855	Satin Nickel
854MX	Matte Black
854W	Matte White NEW

42" L.

858	Chrome
859	Satin Nickel
858MX	Matte Black
858W	Matte White NEW

18" L.

852	Chrome
853	Satin Nickel
852MX	Matte Black
852W	Matte White NEW

36" L.

856	Chrome
857	Satin Nickel
856MX	Matte Black
856W	Matte White NEW

12" L.

850	Chrome
851	Satin Nickel
850MX	Matte Black
850W	Matte White NEW

MATCHING RESIDENTIAL GRIP BARS

Slimmer profile for residential installation
Stainless Steel
⅞" dia. tubing

24" L.

888	Chrome
889	Satin Nickel

18" L.

886	Chrome
887	Satin Nickel

12" L.

883	Chrome
884	Satin Nickel



Fixed Mount Mirror

Can be mounted landscape or portrait
22" W. × 30" H.

1561	Chrome
1562	Satin Nickel
1561MX	Matte Black



Table Mirror

3x Magnification on one side
Pivoting mirror
12½" H. 6¾" dia.

1386C	Chrome
1386SN	Satin Nickel
1386MX	Matte Black



Soap Dish Holder

4⅓" W.

1940	Chrome
1940MX	Matte Black





Countertop 2-Arm Pivot Hand Towel Holder

12" H.

1472C Chrome
1472SN Satin Nickel



Slender Brush Holder

Stainless Steel
15" H., 3⅛" dia.

1481 Chrome
1482 Satin Nickel
1481MX Matte Black
1481W Matte White NEW
1481B Gold NEW



Round Wastebasket

Stainless Steel
11⅞" H., 7⅝" dia. Capacity 2.9 gal

1910 Chrome
1911 Satin Nickel
1912 Matte Black
1910B Brushed Brass
1930 Matte Black & Brushed Brass

See more finishes on page 70

All designs are patented and the exclusive property of GATCO®, Inc.

PIVOTING FRAMELESS MIRRORS

PIVOTS



Frameless
Large Rectangle
23½" W. × 31½" H.

4249S	Chrome
4299S	Satin Nickel
4249MXS	Matte Black
4239S	Brushed Brass



Frameless Rectangle
19½" W. × 24" H.

4249SM	Chrome
4299SM	Satin Nickel
4249MXSM	Matte Black
4239SM	Brushed Brass



Frameless Large Oval
24" W. × 32" H.

4249LG	Chrome
4299LG	Satin Nickel
4249MXLG	Matte Black
4239LG	Brushed Brass

Frameless Oval
19½" W. × 26½" H.

4249	Chrome
4299	Satin Nickel
4249MX	Matte Black
4239	Brushed Brass

FRAMED PIVOTING MIRRORS

PIVOTS



Framed
Large Rectangle
24½" W. × 32½" H.

4249FS	Chrome
4299FS	Satin Nickel
4249MXFS	Matte Black



Framed Rectangle
20½" W. × 25" H.

4249XFSM	Matte Black



Framed Large Oval
25" W. × 33" H.

4249XFLG	Matte Black

Framed Oval
20½" W. × 27½" H.

4249MXF	Matte Black

All GATCO sconces are UL listed and require medium base bulb(s)
Sconces may be mounted upward or downward



Triple Sconce
19⅝" L.

1686	Chrome
1687	Satin Nickel
1686MX	Matte Black
1688	Bright Brushed Brass

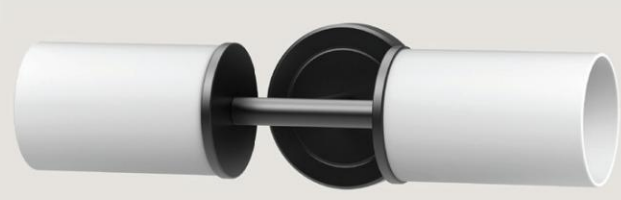

Double Sconce
15⅞" L.

1683	Chrome
1684	Satin Nickel
1683MX	Matte Black



Single Sconce
4½" L.

1680	Chrome
1681	Satin Nickel
1680MX	Matte Black
1682	Bright Brushed Brass

The dimensions reflect the size of the mirror, and do not include the mounting brackets

All GATCO sconces are UL listed and require medium base bulb(s)
Sconces may be mounted upward or downward



Triple Sconce

19⅝" L.

1705	Chrome
1706	Satin Nickel
1705MX	Matte Black
1707	Bright Brushed Brass

Single Sconce

4½" L.

1700	Chrome
1701	Satin Nickel
1700MX	Matte Black
1702	Bright Brushed Brass



Kitchen Paper Towel Stand

Solid Brass construction
6½" dia.,13½" H.

1447	Chrome	
1447MX	Matte Black	
1447B	Brushed Brass	NEW
1447MXB	Brushed Brass & Matte Black	NEW

All designs are patented and the exclusive property of GATCO®, Inc.



S K Y



Chrome



Satin Nickel



Matte Black





24 in. Towel Bar

¾" dia. tubing

5550	Chrome
5560	Satin Nickel
5550MX	Matte Black





18 in. Towel Bar

¾" dia. tubing

5551	Chrome
5561	Satin Nickel
5551MX	Matte Black





Double Towel Bar

24" L.

5554	Chrome
5564	Satin Nickel
5554MX	Matte Black

All designs are patented and the exclusive property of GATCO®, Inc.



Towel Ring
6½" dia.

5552	Chrome
5562	Satin Nickel
5552MX	Matte Black



Tissue Holder
Euro style, 6⅝" L.

5553	Chrome
5563	Satin Nickel
5553MX	Matte Black



Robe Hook
2" H.

5555	Chrome
5565	Satin Nickel
5555MX	Matte Black

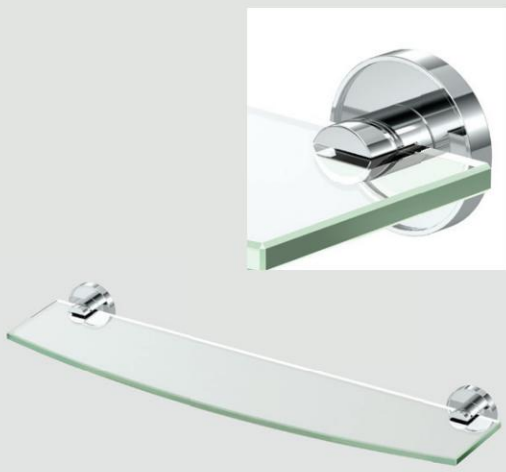

Glass Shelf
20⅛" L., 5⅛" D.
8mm Tempered glass

5556	Chrome
5566	Satin Nickel
5556MX	Matte Black

FRAMED PIVOTING MIRRORS

PIVOTS



Framed Large Rectangle
24½" W. × 32½" H.

5559FS	Chrome
5569FS	Satin Nickel
5559MXFS	Matte Black



Framed Rectangle
20½" W. × 25" H.

5559XFSM	Matte Black



Framed Large Oval
25" W. × 33" H.

5559XFLG	Matte Black

Framed Oval
20½" W. × 27½" H.

5559MXF	Matte Black

PIVOTING FRAMELESS MIRRORS

PIVOTS



Frameless Large Rectangle
23½" W. × 31½" H.

5559S	Chrome
5569S	Satin Nickel
5559MXS	Matte Black



Frameless Rectangle
19½" W. × 24" H.

5559SM	Chrome
5569SM	Satin Nickel
5559MXSM	Matte Black



Frameless Large Oval
24" W. × 32" H.

5559LG	Chrome
5569LG	Satin Nickel
5559MXLG	Matte Black

Frameless Oval
19½" W. × 26½" H.

5559	Chrome
5569	Satin Nickel
5559MX	Matte Black

The dimensions reflect the size of the mirror, and do not include the mounting brackets



CHANNEL



Chrome



Satin Nickel





24 in. Towel Bar

¾" dia. tubing

4680 Chrome
4690 Satin Nickel





18 in. Towel Bar

¾" dia. tubing

4681 Chrome
4691 Satin Nickel





Double Towel Bar

24" L.

4684 Chrome
4694 Satin Nickel

All designs are patented and the exclusive property of GATCO®, Inc.



Towel Ring
6½" dia.
4682 Chrome
4692 Satin Nickel



Tissue Holder
Euro style, 6⅝" L.
4683 Chrome
4693 Satin Nickel



Tissue Storage Holder
7½" H.
4688 Chrome
4698 Satin Nickel



Robe Hook
2⅜" H.
4685 Chrome
4695 Satin Nickel



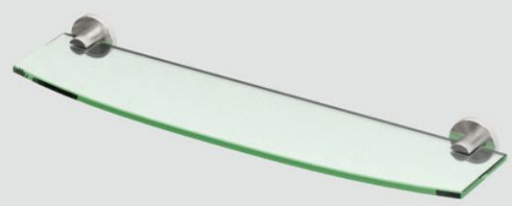

Glass Shelf
20⅛" L., 5¼" D.
8mm Tempered glass
4686 Chrome
4696 Satin Nickel

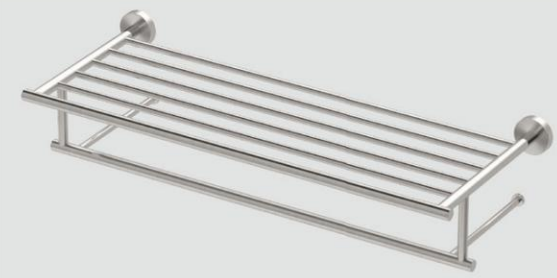

Minimalist Towel Rack
Stainless Steel
25¾" L., 5¼" H.
4637 Chrome
4647 Satin Nickel

PIVOTING MIRRORS



PIVOTS



Frameless Large Rectangle
23½" W. × 31½" H.
4689S Chrome
4699S Satin Nickel



Frameless Rectangle
19½" W. × 24" H.
4689SM Chrome
4699SM Satin Nickel

Frameless Large Oval
24" W. × 32" H.
4689LG Chrome
4699LG Satin Nickel

Frameless Oval
19½" W. × 26½" H.
4689 Chrome
4699 Satin Nickel



Framed Large Rectangle
24½" W. × 32½" H.
4689FS Chrome
4699FS Satin Nickel

The dimensions reflect the size of the mirror, and do not include the mounting brackets



ELEVATE





30 in. Towel Bar
Oval shaped tubing

4050A	Chrome
4070A	Satin Nickel
4050AMX	Matte Black
4060A	Brushed Brass



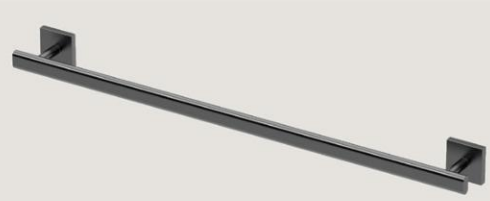

24 in. Towel Bar
Oval shaped tubing

4050	Chrome
4070	Satin Nickel
4050MX	Matte Black
4060	Brushed Brass



Chrome





18 in. Towel Bar
Oval shaped tubing

4051	Chrome
4071	Satin Nickel
4051MX	Matte Black
4061	Brushed Brass

NEW





12 in. Towel Bar
Oval shaped tubing

4051A	Chrome
4071A	Satin Nickel
4051MXA	Matte Black



Satin Nickel



Matte Black

NEW



8 in. Towel Bar
Oval shaped tubing

4051B	Chrome
4071B	Satin Nickel
4051MXB	Matte Black





Double Towel Bar
24” L.

4054	Chrome
4074	Satin Nickel
4054MX	Matte Black
4064	Brushed Brass

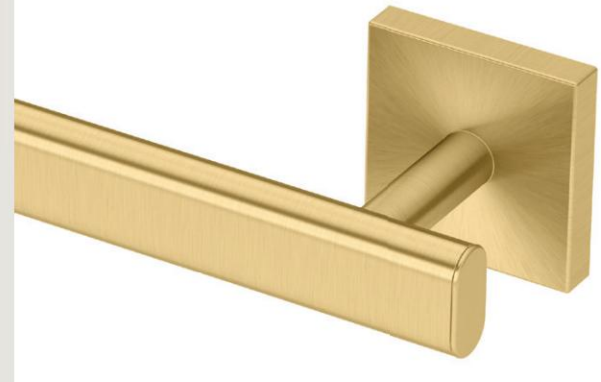

Brushed Brass
Solid Brass construction

All designs are patented and the exclusive property of GATCO®, Inc.



Towel Ring
6⅛” W.

4052	Chrome
4072	Satin Nickel
4052MX	Matte Black
4062	Brushed Brass

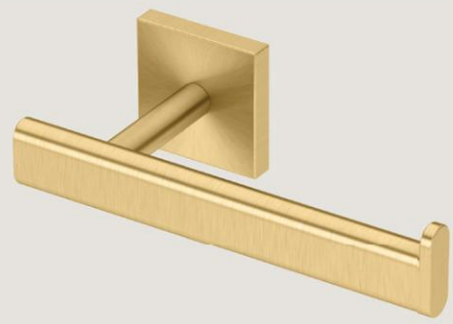

Tissue Holder
Euro style 6⅝” L.

4053	Chrome
4073	Satin Nickel
4053MX	Matte Black
4063	Brushed Brass



Tissue Holder
Traditional style, 2”H.

4053A	Chrome
4073A	Satin Nickel
4053AMX	Matte Black

NEW



Minimalist Tissue Holder with Mobile Shelf
7” W., 4”D.

1422	Chrome
1422SN	Satin Nickel
1422MX	Matte Black



Robe Hook
2½” H.

4055	Chrome
4075	Satin Nickel
4055MX	Matte Black
4065	Brushed Brass



Double Robe Hook
2” H.

4055A	Chrome
4075A	Satin Nickel
4055AMX	Matte Black



All Modern Décor Hook
Triple 11” L.

1287	Chrome
1287SN	Satin Nickel
1287MX	Matte Black
1287B	Brushed Brass



All Modern Décor Hook
Double 6½” L.

1283	Chrome
1283SN	Satin Nickel
1283MX	Matte Black
1283B	Brushed Brass

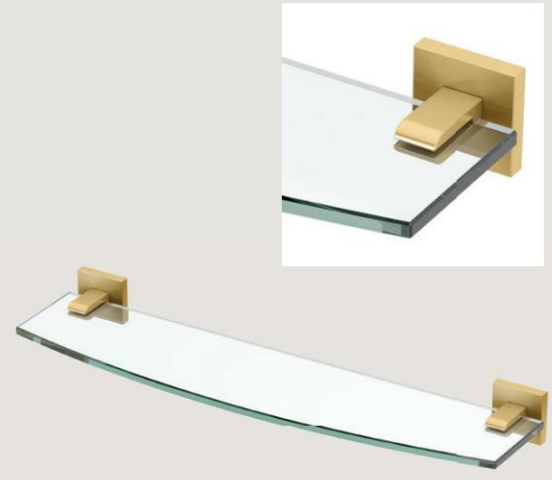

Glass Shelf
20⅛” L., 5½” D.
8mm Tempered glass

4056	Chrome
4076	Satin Nickel
4056MX	Matte Black
4066	Brushed Brass

MATCHING FASHION GRAB BARS

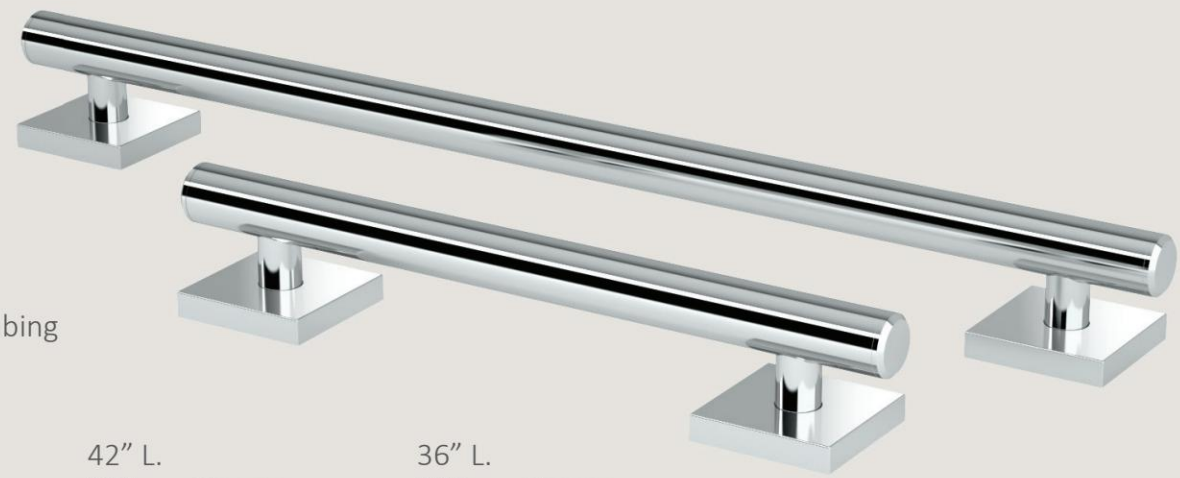

GATCO Grab Bars meet all Americans with Disabilities Act (ADA) & ASTM guidelines
Stainless Steel, Universal fastening system
Compatible with 45° installation, 1¼" dia. tubing

54" L. NEW

948A	Chrome
958A	Satin Nickel
948AMX	Matte Black

48" L. NEW

996A	Chrome
997A	Satin Nickel
996AMX	Matte Black

42" L.

948	Chrome
958	Satin Nickel
948MX	Matte Black NEW

36" L.

946	Chrome
956	Satin Nickel
946MX	Matte Black NEW

30" L. NEW

946A	Chrome
956A	Satin Nickel
946AMX	Matte Black

24" L.

944	Chrome
954	Satin Nickel
944MX	Matte Black NEW
944W	Matte White NEW

18" L.

942	Chrome
952	Satin Nickel
942MX	Matte Black NEW
942W	Matte White NEW

12" L.

940	Chrome
950	Satin Nickel
940MX	Matte Black NEW





All designs are patented and the exclusive property of GATCO®, Inc.

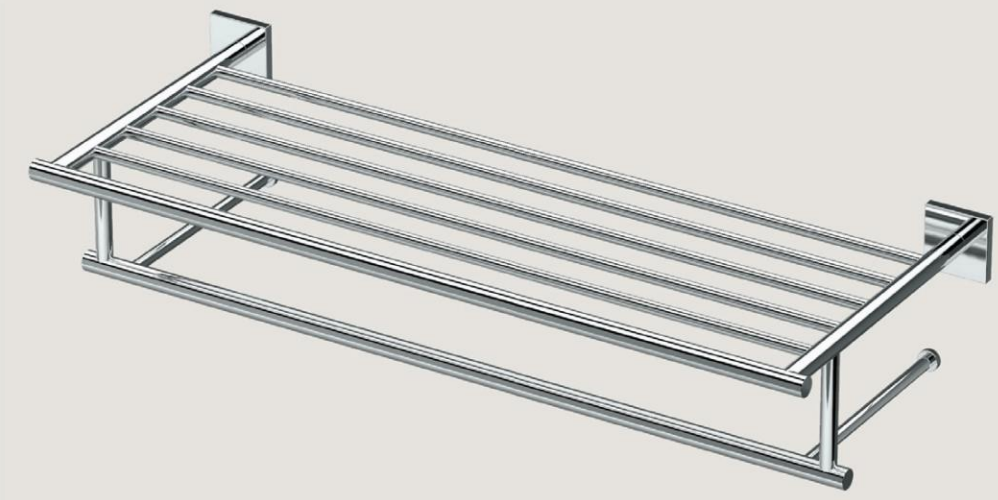

Minimalist Towel Rack
Stainless Steel
25¾" L., 5¼" H.
4057 Chrome
4077 Satin Nickel



Soap Dish Holder
4⅓" W.
1942 Chrome
1942MX Matte Black

SQUARE



Square Wastebasket
Stainless Steel
11⅞ H., 8" W., Capacity 3 gal
1913 Chrome
1914 Satin Nickel
1915 Matte Black
1913B Brushed Brass
1934 Matte Black & Brushed Brass
See more finishes on page 72

SQUARE



Elegant Square Toilet Brush Holder
Stainless Steel, 14⅝" H.
1488 Chrome
1489 Satin Nickel
1488MX Matte Black
1488W Matte White NEW
1488B Gold NEW



Décor Bath Towel Holder
31½" H.
1520MX Matte Black





Tissue Holder
21¼" H.
1431C Chrome
1431SN Satin Nickel
1431MX Matte Black
1431B Brushed Brass
1431W Matte White NEW
1431PN Polished Nickel NEW
1431MXB Brushed Brass & Matte Black NEW





Tissue Holder with Storage
21⅛" H. , Holds up to 4 tissue rolls
1443C Chrome
1443SN Satin Nickel
1443B Brushed Brass

NEW



Countertop Hand Towel Holder with Crystal Clear Acrylic®
11⅛" H.
1344C Chrome
1344SN Satin Nickel
1344B Brushed Brass
1344PN Polished Nickel

PIVOTING FRAMELESS MIRRORS

PIVOTS







Frameless
Large Rectangle
23½" W. × 31½" H.

4059S	Chrome
4079S	Satin Nickel
4059MXS	Matte Black
4069S	Brushed Brass

Frameless Rectangle
19½" W. × 24" H.

4059SM	Chrome
4079SM	Satin Nickel
4059MXSM	Matte Black
4069SM	Brushed Brass

Frameless Large Oval
24" W. × 32" H.

4059LG	Chrome
4079LG	Satin Nickel
4059MXLG	Matte Black
4069LG	Brushed Brass

Frameless Oval
19½" W. × 26½" H.

4059	Chrome
4079	Satin Nickel
4059MX	Matte Black
4069	Brushed Brass

FRAMED PIVOTING MIRRORS

PIVOTS







Framed
Large Rectangle
24½" W. × 32½" H.

4059FS	Chrome
4079FS	Satin Nickel
4059MXFS	Matte Black

Framed Rectangle
20½" W. × 25" H.

4059XFSM	Matte Black

Framed Large Oval
25" W. × 33" H.

4059XFLG	Matte Black

Framed Oval
20½" W. × 27½" H.

4059MXF	Matte Black

All GATCO sconces are UL listed and require medium base bulb(s)
Sconces may be mounted upward or downward





Triple Sconce
19⅝" L.

1705	Chrome
1706	Satin Nickel
1705MX	Matte Black
1707	Bright Brushed Brass

Single Sconce
4½" L.

1700	Chrome
1701	Satin Nickel
1700MX	Matte Black
1702	Bright Brushed Brass



Fixed Mount Mirror
Can be mounted
landscape or portrait
22" W. × 30" H.

1595	Chrome
1596	Satin Nickel
1595MX	Matte Black

The dimensions reflect the size of the mirror, and do not include the mounting brackets



A-LINE





24 in. Towel Bar

Oval tubing

5650	Chrome
5660	Satin Nickel
5650MX	Matte Black
5670	Brushed Brass & Matte Black





18 in. Towel Bar

Oval tubing

5651	Chrome
5661	Satin Nickel
5651MX	Matte Black
5671	Brushed Brass & Matte Black



Chrome



Towel Ring

6⅛"W.

5652	Chrome
5662	Satin Nickel
5652MX	Matte Black
5672	Brushed Brass & Matte Black

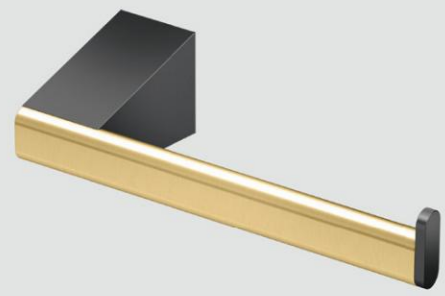

Tissue Holder

Euro style, 6½" L.

5653	Chrome
5663	Satin Nickel
5653MX	Matte Black
5673	Brushed Brass & Matte Black



Satin Nickel



Robe Hook

2½" H.

5655	Chrome
5665	Satin Nickel
5655MX	Matte Black
5675	Brushed Brass & Matte Black

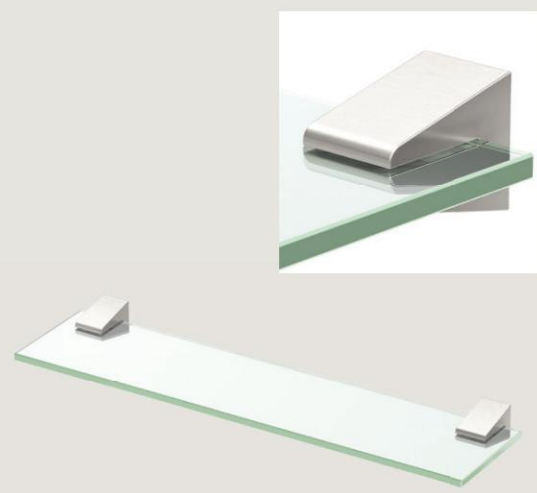

Glass Shelf

20⅛" L., 5⅛" D.

8mm Tempered glass

5656	Chrome
5666	Satin Nickel
5656MX	Matte Black



Matte Black



Brushed Brass & Matte Black

All designs are patented and the exclusive property of GATCO®, Inc.

PIVOTING FRAMELESS MIRRORS

PIVOTS



Frameless
Large Rectangle
23½" W. × 31½" H.

5659S	Chrome
5669S	Satin Nickel
5659MXS	Matte Black
5679S	Brushed Brass & Matte Black



Frameless Rectangle
19½" W. × 24" H.

5659SM	Chrome
5669SM	Satin Nickel
5659MXSM	Matte Black
5679SM	Brushed Brass & Matte Black



Frameless Large Oval
24" W. × 32" H.

5659LG	Chrome
5669LG	Satin Nickel
5659MXLG	Matte Black
5679LG	Brushed Brass & Matte Black

Frameless Oval
19½" W. × 26½" H.

5659	Chrome
5669	Satin Nickel
5659MX	Matte Black
5679	Brushed Brass & Matte Black

FRAMED PIVOTING MIRRORS

PIVOTS



Framed
Large Rectangle
24½" W. × 32½" H.

5659FS	Chrome
5669FS	Satin Nickel
5659MXFS	Matte Black



Framed Rectangle
20½" W. × 25" H.

5659XFSM	Matte Black



Framed Large Oval
25" W. × 33" H.

5659XFLG	Matte Black

Framed Oval
20½" W. × 27½" H.

5659MXF	Matte Black



All Modern Décor Hooks

Triple 11" L.
1292MXB Brushed Brass & Matte Black

Double 6½" L.
1291MXB Brushed Brass & Matte Black

See more finishes on page 84

SQUARE



Square Wastebasket

Stainless Steel
11⅞ H., 8" W. Capacity 3 gal

1913	Chrome
1914	Satin Nickel
1915	Matte Black
1913B	Brushed Brass
1934	Matte Black & Brushed Brass

See more finishes on page 72



Modern Floor Towel Holder

32½" H.

1552C	Chrome
1552SN	Satin Nickel
1552MX	Matte Black
1552PN	Polished Nickel NEW

The dimensions reflect the size of the mirror, and do not include the mounting brackets

MODE



Chrome

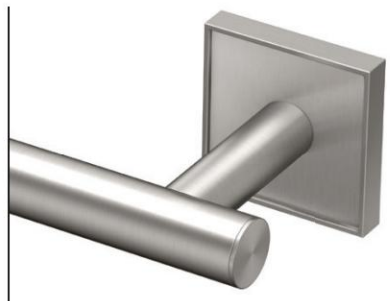

Satin Nickel



Matte Black





24 in. Towel Bar

¾" dia. tubing

5610 Chrome
5620 Satin Nickel
5610MX Matte Black





18 in. Towel Bar

¾" dia. tubing

5611 Chrome
5621 Satin Nickel
5611MX Matte Black





Double Towel Bar

24" L.

5614 Chrome
5624 Satin Nickel
5614MX Matte Black



Towel Ring

5¾" W.

5612 Chrome
5622 Satin Nickel
5612MX Matte Black

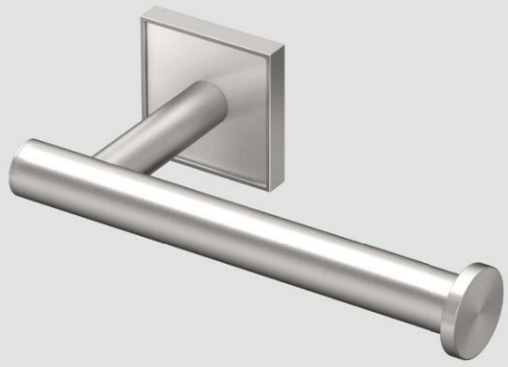

Tissue Holder

Euro style, 6⅝" L.

5613 Chrome
5623 Satin Nickel
5613MX Matte Black



Robe Hook

2⅜" H.

5615 Chrome
5625 Satin Nickel
5615MX Matte Black

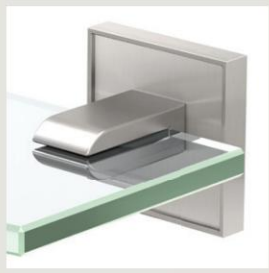



Glass Shelf

20⅛" L., 5⅛" D.

8mm Tempered glass

5616 Chrome
5626 Satin Nickel
5616MX Matte Black



Tissue Holder

21¼" H.

1431C Chrome
1431SN Satin Nickel
1431MX Matte Black
1431B Brushed Brass
1431W Matte White NEW
1431PN Polished Nickel NEW
1431MXB Brushed Brass & Matte Black NEW





Tissue Holder with Storage

21⅛" H. Holds up to 4 tissue rolls

1443C Chrome
1443SN Satin Nickel
1443B Brushed Brass

All designs are patented and the exclusive property of Gatco®, Inc.

PIVOTING FRAMELESS MIRRORS

PIVOTS



Frameless
Large Rectangle
23½" W. × 31½" H.

5619S	Chrome
5629S	Satin Nickel
5619MXS	Matte Black



Frameless Rectangle
19½" W. × 24" H.

5619SM	Chrome
5629SM	Satin Nickel
5619MXSM	Matte Black



Frameless Large Oval
24" W. × 32" H.

5619LG	Chrome
5629LG	Satin Nickel
5619MXLG	Matte Black

Frameless Oval
19½" W. × 26½" H.

5619	Chrome
5629	Satin Nickel
5619MX	Matte Black

FRAMED PIVOTING MIRRORS

PIVOTS



Framed
Large Rectangle
24½" W. × 32½" H.

5619FS	Chrome
5629FS	Satin Nickel
5619MXFS	Matte Black



Framed Rectangle
20½" W. × 25" H.
5619XFSM Matte Black



Framed Large Oval
25" W. × 33" H.
5619XFLG Matte Black

Framed Oval
20½" W. × 27½" H.
5619MXF Matte Black



SQUARE

Square Wastebasket
Stainless Steel
11⅞ H., 8" W., Capacity 3 gal

1913	Chrome
1914	Satin Nickel
1915	Matte Black
1913B	Brushed Brass
1934	Matte Black & Brushed Brass

See more finishes on page 72

c UL us All GATCO sconces are UL listed and require medium base bulb(s)
Sconces may be mounted upward or downward



Triple Sconce
19⅝" L.

1705	Chrome
1706	Satin Nickel
1705MX	Matte Black
1707	Bright Brushed Brass

Single Sconce
4½" L.

1700	Chrome
1701	Satin Nickel
1700MX	Matte Black
1702	Bright Brushed Brass

The dimensions reflect the size of the mirror, and do not include the mounting brackets

B L E U



Chrome



Satin Nickel

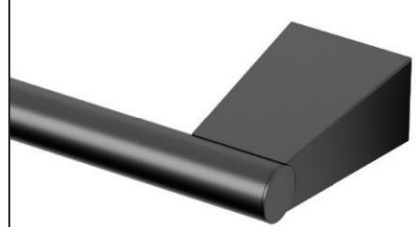

Matte Black





24 in. Towel Bar

⅝" dia. tubing

4710	Chrome
4730	Satin Nickel
4710MX	Matte Black





18 in. Towel Bar

⅝" dia. tubing

4711	Chrome
4731	Satin Nickel
4711MX	Matte Black





Double Towel Bar

24" L.

4714	Chrome
4734	Satin Nickel
4714MX	Matte Black



Towel Ring

6½" dia.

4712	Chrome
4732	Satin Nickel
4712MX	Matte Black

Tissue Holder

Euro style, 6⅜" L.

4713	Chrome
4733	Satin Nickel
4713MX	Matte Black

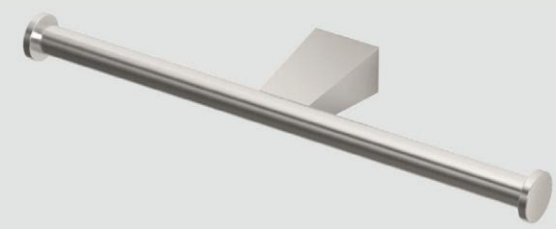

Double Tissue Holder

Holds up to 2 rolls, 11½" L.

4713A	Chrome
4733A	Satin Nickel



Robe Hook

2¼" H.

4715	Chrome
4735	Satin Nickel
4715MX	Matte Black



Glass Shelf

20⅛" L., 4" D.

8mm Tempered glass

4716	Chrome
4736	Satin Nickel
4716MX	Matte Black



Fixed Mount Mirror

Can be mounted landscape or portrait

22" W. × 30" H.

1563	Chrome
1564	Satin Nickel
1563MX	Matte Black

All designs are patented and the exclusive property of GATCO®, Inc.

PIVOTING FRAMELESS MIRRORS

PIVOTS







Frameless
Large Rectangle
23½" W. × 31½" H.

4379S	Chrome
4389S	Satin Nickel
4719MXS	Matte Black

Frameless Rectangle
19½" W. × 24" H.

4379SM	Chrome
4389SM	Satin Nickel
4719MXSM	Matte Black

Frameless Large Oval
24" W. × 32" H.

4379LG	Chrome
4389LG	Satin Nickel
4719MXLG	Matte Black

Frameless Oval
19½" W. × 26½" H.

4379	Chrome
4389	Satin Nickel
4719MX	Matte Black

FRAMED PIVOTING MIRRORS

PIVOTS







Framed
Large Rectangle
24½" W. × 32½" H.

4379FS	Chrome
4389FS	Satin Nickel
4719MXFS	Matte Black

Framed Rectangle
20½" W. × 25" H.

4719XFSM	Matte Black

Framed Large Oval
25" W. × 33" H.

4719XFLG	Matte Black

Framed Oval
20½" W. × 27½" H.

4719MXF	Matte Black

All GATCO sconces are UL listed and require medium base bulb(s)
Sconces may be mounted upward or downward



Triple Sconce
19⅝" L.

1705	Chrome
1706	Satin Nickel
1705MX	Matte Black
1707	Bright Brushed Brass

Single Sconce
4½" L.

1700	Chrome
1701	Satin Nickel
1700MX	Matte Black
1702	Bright Brushed Brass



Countertop Hand Towel Holder
11⅛" H.

1444C	Chrome
1444SN	Satin Nickel
1444MX	Matte Black
1444B	Brushed Brass
1444PN	Polished Nickel NEW
1444W	Matte White NEW
1444MXB	Brushed Brass & Matte Black NEW

The dimensions reflect the size of the mirror, and do not include the mounting brackets

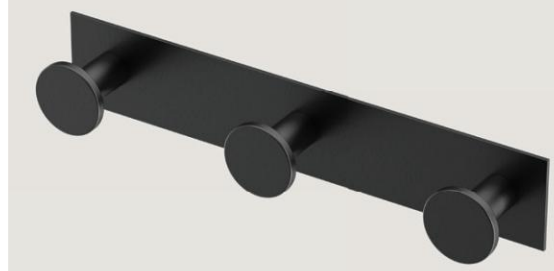

All Modern Décor Hook

Triple 11" L.

1288	Chrome
1288SN	Satin Nickel
1288MX	Matte Black
1288B	Brushed Brass



All Modern Décor Hook

Double 6½" L.

1284	Chrome
1284SN	Satin Nickel
1284MX	Matte Black
1284B	Brushed Brass

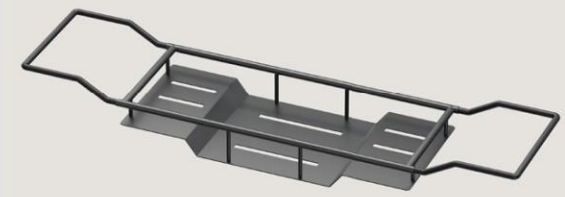

Modern Bath Tub Caddy

Stainless Steel

28" - 37" W. adjustable

1418C	Chrome
1418MX	Matte Black

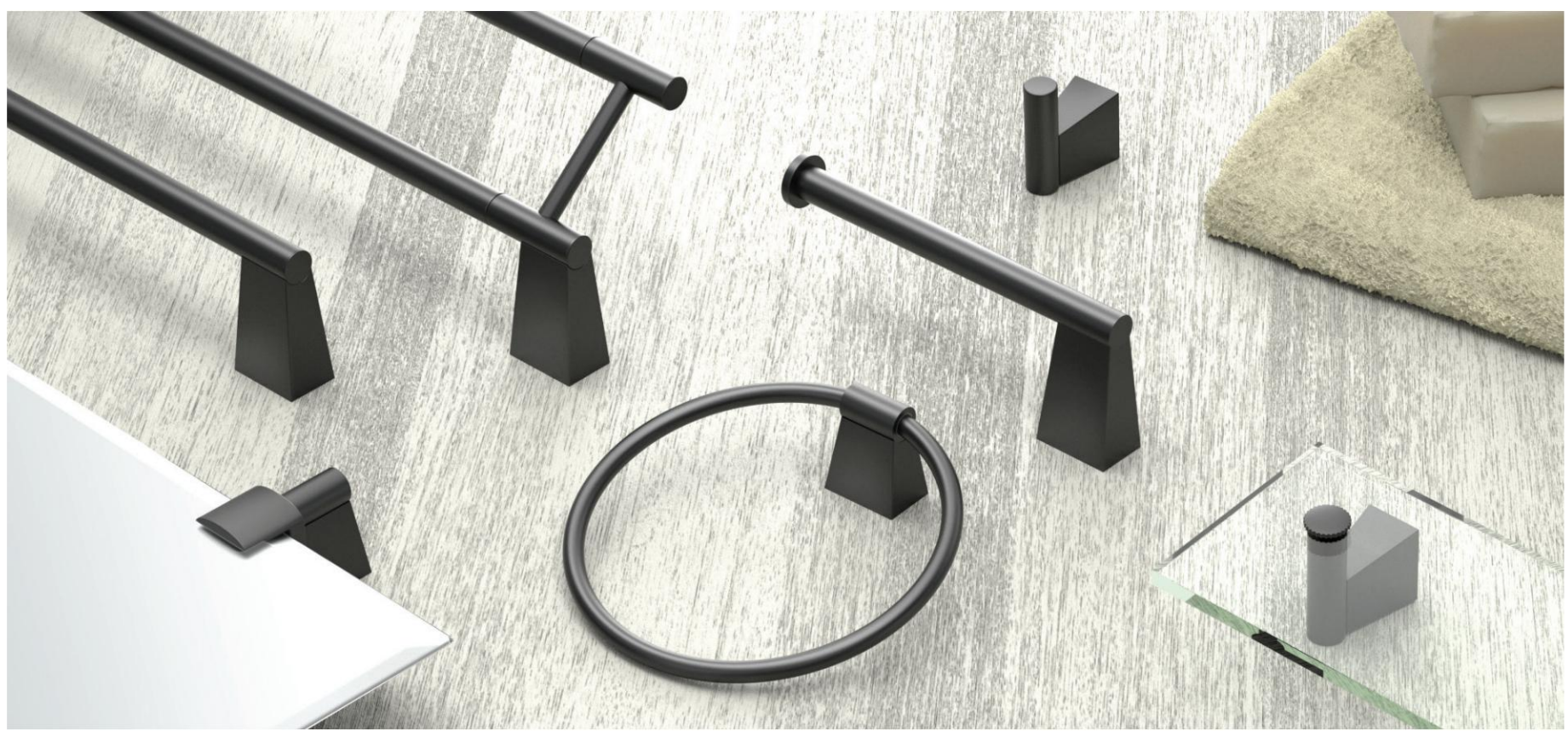



Modern Floor Towel Holder

32½" H.

1552C	Chrome
1552SN	Satin Nickel
1552MX	Matte Black
1552PN	Polished Nickel NEW

SQUARE



Elegant Square Toilet Brush Holder

Stainless Steel, 14⅝" H.

1488	Chrome
1489	Satin Nickel
1488MX	Matte Black
1488W	Matte White NEW
1488B	Gold NEW

RECTANGLE



Rectangle Wastebasket

Stainless Steel

11¼ H., 11¼" W. Capacity 3.2 gal

1916	Chrome
1917	Satin Nickel
1918	Matte Black
1916B	Brushed Brass
1938	Matte Black & Brushed Brass

See more finishes on page 71

All designs are patented and the exclusive property of GATCO®, Inc.

WATERLINE



Chrome



Satin Nickel



Matte Black





24 in. Towel Bar

Oval shaped tubing

5580	Chrome
5590	Satin Nickel
5580MX	Matte Black





18 in. Towel Bar

Oval shaped tubing

5581	Chrome
5591	Satin Nickel
5581MX	Matte Black



Towel Ring

5⅞" W.

5582	Chrome
5592	Satin Nickel
5582MX	Matte Black



Tissue Holder

Euro style, 6⅞" L.

5583	Chrome
5593	Satin Nickel
5583MX	Matte Black

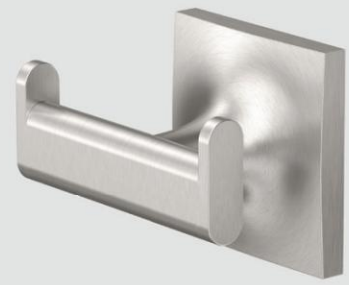

Robe Hook

2⅛" H.

5585	Chrome
5595	Satin Nickel
5585MX	Matte Black

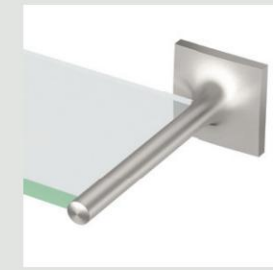

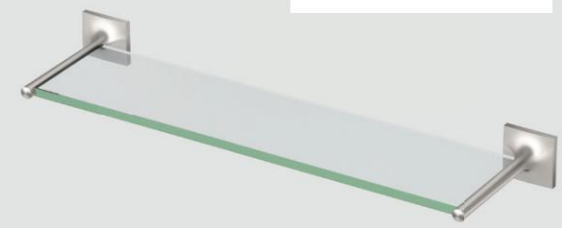

Glass Shelf

21½" L., 5¾" D.

8mm Tempered glass

5586	Chrome
5596	Satin Nickel
5586MX	Matte Black

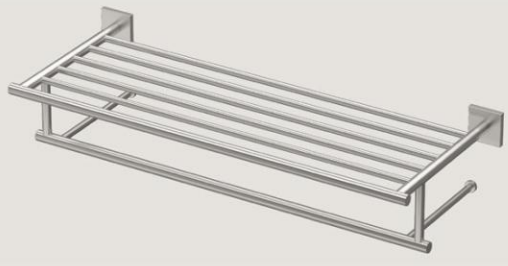

Minimalist Towel Rack

Stainless Steel

25¾" L., 5¼" H.

4057	Chrome
4077	Satin Nickel



Table Mirror

Solid Brass construction

3x Magnification on one side

9¾" W., 12" H., 3½ D.

1381	Chrome
1382	Satin Nickel



Countertop Hand Towel Holder

11⅛" H.

1444C	Chrome	
1444SN	Satin Nickel	
1444MX	Matte Black	
1444B	Brushed Brass	
1444PN	Polished Nickel	NEW
1444W	Matte White	NEW
1444MXB	Brushed Brass & Matte Black	NEW

All designs are patented and the exclusive property of GATCO®, Inc.

PIVOTING FRAMELESS MIRRORS

PIVOTS



Frameless
Large Rectangle
23½" W. × 31½" H.

5589S	Chrome
5599S	Satin Nickel
5589MXS	Matte Black



Frameless Rectangle
19½" W. × 24" H.

5589SM	Chrome
5599SM	Satin Nickel
5589MXSM	Matte Black



Frameless Large Oval
24" W. × 32" H.

5589LG	Chrome
5599LG	Satin Nickel
5589MXLG	Matte Black

Frameless Oval
19½" W. × 26½" H.

5589	Chrome
5599	Satin Nickel
5589MX	Matte Black

FRAMED PIVOTING MIRRORS

PIVOTS



Framed
Large Rectangle
24½" W. × 32½" H.

5589FS	Chrome
5599FS	Satin Nickel
5589MXFS	Matte Black



Framed Rectangle
20½" W. × 25" H.

5589XFSM	Matte Black



Framed Large Oval
25" W. × 33" H.

5589XFLG	Matte Black

Framed Oval
20½" W. × 27½" H.

5589MXF	Matte Black

All GATCO sconces are UL listed and require medium base bulb(s)
Sconces may be mounted upward or downward



Triple Sconce
19⅝" L.

1705	Chrome
1706	Satin Nickel
1705MX	Matte Black
1707	Bright Brushed Brass



Single Sconce
4½" L.

1700	Chrome
1701	Satin Nickel
1700MX	Matte Black
1702	Bright Brushed Brass



Elegant Corner Shelves
Stainless Steel
with concealed mounting
13" L.

1463	Chrome
1464	Brushed

9" L.

1470	Chrome
1471	Brushed

The dimensions reflect the size of the mirror, and do not include the mounting brackets



Tissue Holder

21¼" H.



1431C	Chrome
1431SN	Satin Nickel
1431MX	Matte Black
1431B	Brushed Brass
1431W	Matte White NEW
1431PN	Polished Nickel NEW
1431MXB	Brushed Brass & Matte Black NEW

Décor Bath Towel Holder

31½" H.

1520MX Matte Black





SQUARE



Square Wastebasket

Stainless Steel

11⅞ H., 8" W. Capacity 3 gal

1913	Chrome
1914	Satin Nickel
1915	Matte Black
1913B	Brushed Brass
1934	Matte Black & Brushed Brass

See more finishes on page 72

All designs are patented and the exclusive property of GATCO®, Inc.



TAVERN





24 in. Towel Bar

¾" dia. tubing

4120 Polished Nickel
4020 Satin Nickel





18 in. Towel Bar

¾" dia. tubing

4121 Polished Nickel
4021 Satin Nickel



Polished Nickel





Double Towel Bar

24" L.

4124 Polished Nickel
4024 Satin Nickel



Towel Ring

6½" dia.

4122 Polished Nickel
4022 Satin Nickel

NEW



Tissue Holder

Euro style, 7⅛" L.

4123 Polished Nickel
4023 Satin Nickel



Tissue Holder

2⅛" H.

4123B Polished Nickel
4023B Satin Nickel



Satin Nickel

All designs are patented and the exclusive property of GATCO®, Inc.



Robe Hook
4⅜" H.
4125 Polished Nickel
4025 Satin Nickel



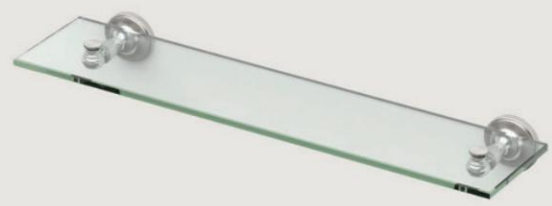

Glass Shelf
20⅛" L., 5½" D.
8mm Tempered glass
4126 Polished Nickel
4026 Satin Nickel



Countertop S-Towel Holder
14¼" H.
1546 Chrome
1547 Satin Nickel
1545BZ Bronze
1546MX Matte Black
1546PN Polished Nickel NEW

PIVOTING MIRRORS



PIVOTS



Frameless Large Rectangle
23½" W. × 31½" H.
4129S Polished Nickel
4029S Satin Nickel



Frameless Rectangle
19½" W. × 24" H.
4129SM Polished Nickel
4029SM Satin Nickel



Frameless Large Oval
24" W. × 32" H.
4129LG Polished Nickel
4029LG Satin Nickel

Frameless Oval
19½" W. × 26½" H.
4129 Polished Nickel
4029 Satin Nickel

Framed Large Rectangle
24½" W. × 32½" H.
4129FS Polished Nickel
4029FS Satin Nickel



Modern Floor Towel Holder
32½" H.
1552C Chrome
1552SN Satin Nickel
1552MX Matte Black
1552PN Polished Nickel NEW

c UL us All GATCO sconces are UL listed and require medium base bulb(s)
Sconces may be mounted upward or downward





Triple Sconce
20" L.
1626 Polished Nickel
1627 Satin Nickel

Single Sconce
4¾" L.
1620 Polished Nickel
1621 Satin Nickel

The dimensions reflect the size of the mirror, and do not include the mounting brackets

NEW

MATCHING FASHION GRAB BARS

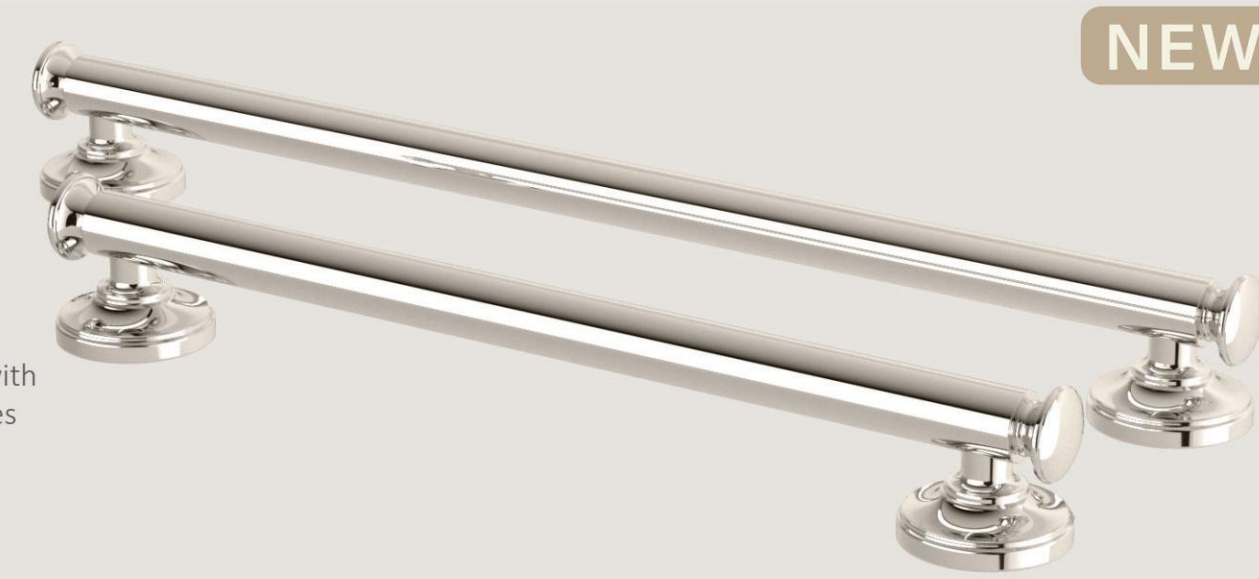

GATCO Grab Bars meet all Americans with Disabilities Act (ADA) & ASTM guidelines

Stainless Steel
Universal fastening system
Compatible with 45° installation
1¼" dia. tubing

36" L.		24" L.		18" L.	
644PN	Polished Nickel	**642PN**	Polished Nickel	**641PN**	Polished Nickel
644SN	Satin Nickel	**642SN**	Satin Nickel	**641SN**	Satin Nickel
644MX	Matte Black	**642MX**	Matte Black	**641MX**	Matte Black

AMERICANS WITH DISABILITIES ACT
ADA
COMPLIANT

All designs are patented and the exclusive property of GATCO®, Inc.

CAFÉ



Chrome





24 in. Towel Bar
¾" dia. tubing
4410 Chrome





18 in. Towel Bar
¾" dia. tubing
4411 Chrome





Double Towel Bar
24" L.
4414 Chrome

All designs are patented and the exclusive property of GATCO®, Inc.



Towel Ring
6½" dia.
4412 Chrome



Tissue Holder
Euro style, 7¼" L.
4413 Chrome



Robe Hook
3⅛" H.
4415 Chrome





Glass Shelf
20⅛" L., 5½" D.
8mm Tempered glass
4416 Chrome

All GATCO sconces are UL listed
Glass shade may face upward or downward
Following sconces require medium base bulb(s)



Double Sconce
16"L.
1613 Chrome
1615 Bronze



Single Sconce
7" L.
1610 Chrome
1612 Bronze

PIVOTING MIRRORS



PIVOTS



Frameless Large Rectangle
23½" W. × 31½" H.
4419S Chrome



Frameless Rectangle
19½" W. × 24" H.
4419SM Chrome



Frameless Large Oval
24" W. × 32" H.
4419LG Chrome

Frameless Oval
19½" W. × 26½" H.
4419 Chrome

Framed Large Rectangle
24½" W. × 32½" H.
4419FS Chrome

The dimensions reflect the size of the mirror, and do not include the mounting brackets

DESIGNER II



Chrome



Matte Black



Brushed Brass

Solid Brass construction





30 in. Towel Bar

¾" dia. tubing

5078	Chrome
5078MX	Matte Black
5058	Brushed Brass

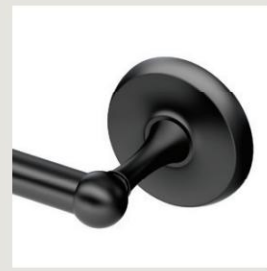



24 in. Towel Bar

¾" dia. tubing

5070	Chrome
5070MX	Matte Black
5050	Brushed Brass





18 in. Towel Bar

¾" dia. tubing

5071	Chrome
5071MX	Matte Black
5051	Brushed Brass





Double Towel Bar

¾" dia. tubing

5375	Chrome
5375MX	Matte Black
5054	Brushed Brass



Towel Ring

6½" dia.

5073	Chrome
5073MX	Matte Black
5053	Brushed Brass



Tissue Holder

Euro style, 8"L.

5370	Chrome
5370MX	Matte Black
5052	Brushed Brass



Tissue Holder

Traditional style, 2¾" H.

5072	Chrome



Robe Hook

2¾" H.

5076	Chrome
5076MX	Matte Black
5056	Brushed Brass



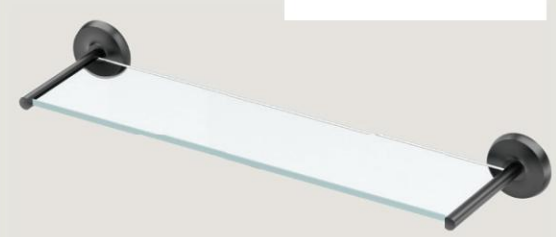

Glass Shelf

22½" L., 5⅞" D.

8mm Tempered glass

5077	Chrome
5077MX	Matte Black
5057	Brushed Brass

All designs are patented and the exclusive property of GATCO®, Inc.

PIVOTING FRAMELESS MIRRORS

PIVOTS



Frameless
Large Rectangle
23½" W. × 31½" H.

5079S	Chrome
5079MXS	Matte Black
5059S	Brushed Brass



Frameless Rectangle
19½" W. × 24" H.

5079SM	Chrome
5079MXSM	Matte Black
5059SM	Brushed Brass



Frameless Large Oval
24" W. × 32" H.

5079LG	Chrome
5079MXLG	Matte Black
5059LG	Brushed Brass

Frameless Oval
19½" W. × 26½" H.

5079	Chrome
5079MX	Matte Black
5059	Brushed Brass

FRAMED PIVOTING MIRRORS

PIVOTS



Framed
Large Rectangle
24½" W. × 32½" H.

5079FS	Chrome
5079MXFS	Matte Black



Framed Rectangle
20½" W. × 25" H.

5079XFSM	Matte Black



Framed Large Oval
25" W. × 33" H.

5079XFLG	Matte Black

Framed Oval
20½" W. × 27½" H.

5079MXF	Matte Black





Tissue Holder
22" H.

1436C	Chrome	
1436SN	Satin Nickel	
1436MX	Matte Black	
1436BZ	Bronze	
1436	Polished Brass	
1436PN	Polished Nickel	NEW
1436MXB	Matte Black & Brushed Brass	NEW

The dimensions reflect the size of the mirror, and do not include the mounting brackets

All GATCO sconces are UL listed and require medium base bulb(s)
Sconces may be mounted upward or downward



Triple Sconce
20½”L.
1646 Chrome

Single Sconce
4½”L.
1640 Chrome



Round Wastebasket
Stainless Steel
11⅞” H., 7⅝” dia. Capacity 2.9 gal
1910 Chrome
1911 Satin Nickel
1912 Matte Black
1910B Brushed Brass
1930 Matte Black & Brushed Brass
See more finishes on page 70

All GATCO sconces are UL listed
Edison light bulb(s) included



Double Sconce
15⅞” W.
1720 Chrome
1721 Satin Nickel
1722 Matte Black
1723 Bright Brushed Brass
1724 Matte Black & Bright Brushed Brass



Single Sconce
7” W.
1710 Chrome
1711 Satin Nickel
1712 Matte Black
1713 Bright Brushed Brass
1714 Matte Black & Bright Brushed Brass



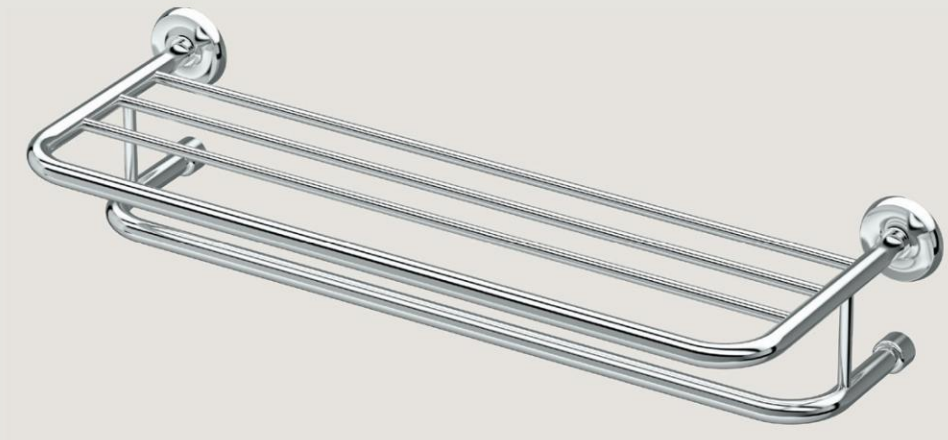

Spa Towel Rack
Stainless Steel
26½” L., 5⅝” H.
5376 Chrome
5378 Satin Nickel



Oval Vanity Stool
18”W., 19½” H., 14”D.
1358 Chrome
1359 Satin Nickel

OVAL

All designs are patented and the exclusive property of GATCO®, Inc.

NEW

LIZZIE





24 in. Towel Bar

⅝" dia. tubing

5420 Chrome
5410 Satin Nickel





18 in. Towel Bar

⅝" dia. tubing

5421 Chrome
5411 Satin Nickel



Chrome



Towel Ring

6½" W.

5422 Chrome
5412 Satin Nickel



Tissue Holder

Euro style, 6⅞" L.

5423 Chrome
5413 Satin Nickel



Satin Nickel



Robe Hook

2½" H.

5425 Chrome
5415 Satin Nickel



Single Sconce

7" W.

1710 Chrome
1711 Satin Nickel
1712 Matte Black
1713 Bright Brushed Brass
1714 Matte Black & Bright Brushed Brass

All designs are patented and the exclusive property of GATCO®, Inc.

NEW



STUDIO



24 in. Towel Bar
¾" dia. tubing
5500 Matte Black



18 in. Towel Bar
¾" dia. tubing
5501 Matte Black



Towel Ring
6½" W.
5502 Matte Black



Tissue Holder
Euro style, 7⅛" L.
5503 Matte Black



Matte Black

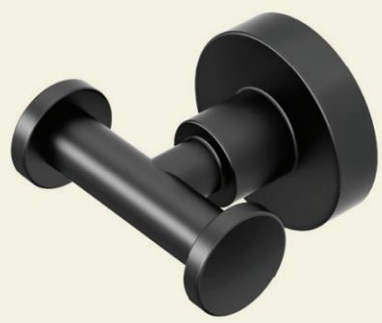

Robe Hook
2" H.
5505 Matte Black

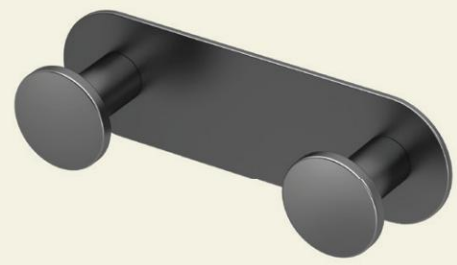

All Modern Décor Hook
Double 6½" L.

1281	Chrome
1285	Satin Nickel
1281MX	Matte Black
1281B	Brushed Brass (Solid Brass)

All designs are patented and the exclusive property of GATCO®, Inc.



NEW

COMBINATIONS

by

GATCO®

ROUND



Wastebasket
Stainless Steel
11⅞" H., 7⅝" dia. Capacity 2.9 gal
1930
See page 70 for more finishes



Tissue Holder
22" H.
1436MXB
See page 82 for more finishes



Tissue Holder
21¼" H.
1431MXB
See page 82 for more finishes



Minimalist Tissue Holder with Mobile Shelf
7" W., 4"D.
1420MXB
See page 88 for more finishes



Countertop
11⅛" H.
Hand Towel Holder
1444MXB
See page 80 for more finishes



Kitchen Paper Towel Stand
Solid Brass construction
6½" dia.,13½" H.
1447MXB
See page 80 for more finishes



LATITUDE²
All Modern Décor Hooks
Triple 11" L.
1292MXB
Double 6½" L.
1291MXB
See page 84 for more finishes

SQUARE



Wastebasket
Stainless Steel
11⅞ H., 8" W. Capacity 3 gal.
1934
See page 72 for more finishes

RECTANGLE



Wastebasket
Stainless Steel
11¼ H., 11¼" W., Capacity 3.2 gal.
1938
See page 71 for more finishes

OVAL



Wastebasket
Stainless Steel
11¼ H., 10⅜" W., Capacity 2.8 gal.
1937
See page 69 for more finishes

All designs are patented and the exclusive property of GATCO®, Inc.

NEW



CLARION

POLISHED NICKEL

More finishes available
See page 5

more combinations...

CRYSTAL CLEAR ACRYLIC®

essentials



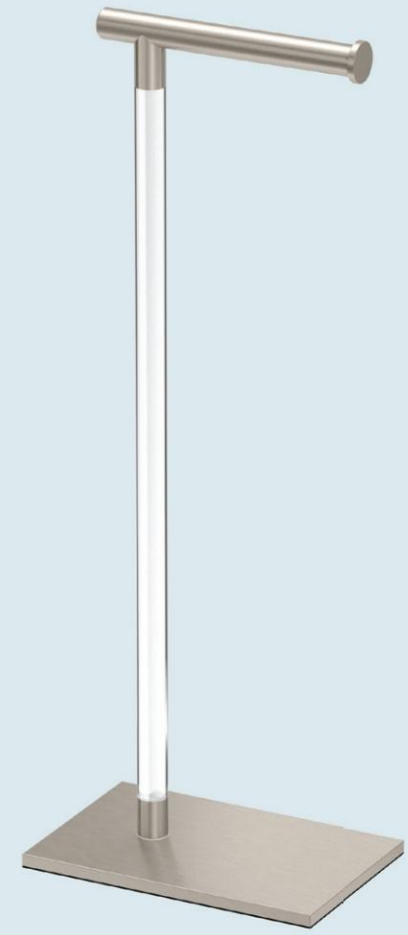

Tissue Holder

21¼" H.

1331C	Chrome
1331SN	Satin Nickel
1331PN	Polished Nickel



Countertop Hand Towel Holder

11⅛" H.

1344C	Chrome
1344SN	Satin Nickel
1344PN	Polished Nickel

All designs are patented and the exclusive property of GATCO®, Inc.

NEW

MATTE WHITE

essentials





Tissue Holder
21¼" H.
1431W Matte White
See page 81 for more finishes

SQUARE



Elegant Square Toilet Brush Holder
Stainless Steel
14⅝" H.
1488W Matte White
See page 83 for more finishes



Slender Brush Holder
Stainless Steel
15" H., 3⅛" dia.
1481W Matte White
See page 83 for more finishes



Countertop Hand Towel Holder
11⅛" H.
1444W Matte White
See page 80 for more finishes



SQUARE



Wastebasket
Stainless Steel
11⅞ H., 8" W. Capacity 3 gal.
1935 Matte Pearl
See page 72 for more finishes

RECTANGLE



Wastebasket
Stainless Steel
11¼ H., 11¼" W., Capacity 3.2 gal.
1939 Matte Pearl
See page 71 for more finishes

ROUND



Wastebasket
Stainless Steel
11⅞" H., 7⅝" dia. Capacity 2.9 gal.
1931 Matte Pearl
See page 70 for more finishes

All designs are patented and the exclusive property of GATCO®, Inc.

WASTEBASKETS

Stainless Steel construction

Removable Top & 100% Leak Proof



NEW OVAL 11¼ H., 10⅜" W., Capacity 2.8 gal / 10.75 L



1923 Chrome



1924 Satin Nickel



1925 Matte Black



1923B Brushed Brass



1937 Matte Black & Brushed Brass



ROUND 11⅞ H., 7⅝" dia. Capacity 2.9 gal / 11 L



1910 Chrome



1911 Satin Nickel



1912 Matte Black



1910B Brushed Brass

NEW



1931 Matte Pearl

All designs are patented and the exclusive property of GATCO®, Inc.



RECTANGLE 11¼ H., 11¼" W., Capacity 3.2 gal / 12 L



1916 Chrome



1917 Satin Nickel



1918 Matte Black



1916B Brushed Brass

NEW



1939 Matte Pearl



SQUARE 11⅞ H., 8” W., Capacity 3 gal / 11 L



1913 Chrome



1914 Satin Nickel



1915 Matte Black



1913B Brushed Brass

NEW



1935 Matte Pearl

All designs are patented and the exclusive property of GATCO®, Inc.



GATCO Grab Bars meet all Americans with Disabilities Act (ADA) & ASTM guidelines

FASHION GRAB BARS

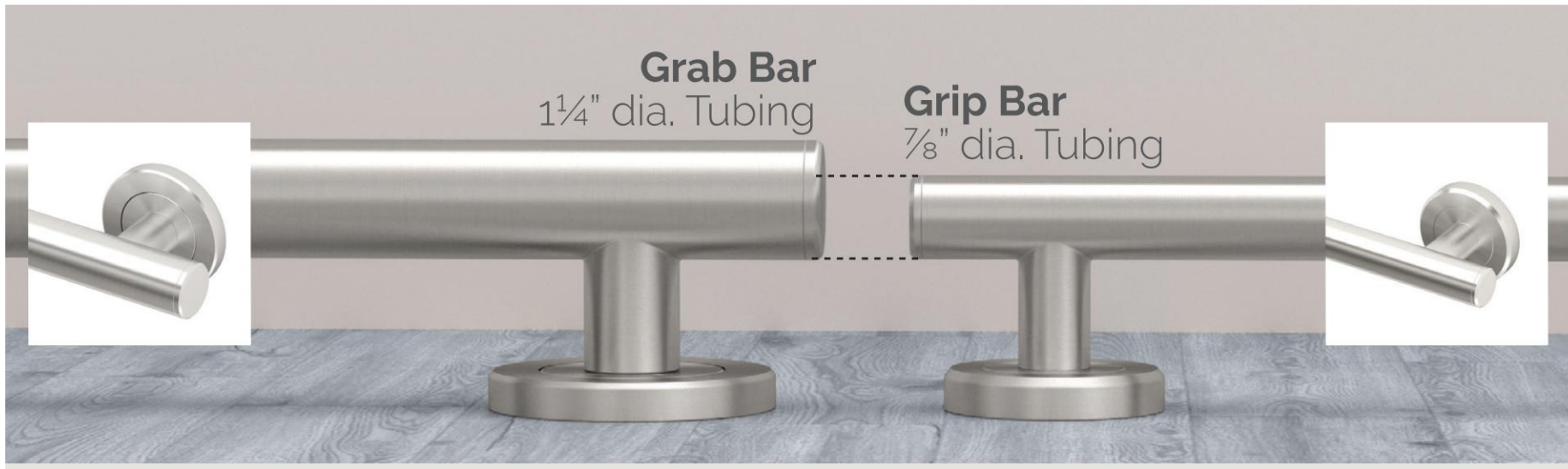

Matches LATITUDE² Bath Accessories See page 17



LATITUDE²

Fashion Grab Bars

GATCO Grab Bars meet all Americans with Disabilities Act (ADA) & ASTM guidelines
Universal fastening system
Compatible with 45° installation
Stainless Steel
1¼" dia. tubing

54" L.
858A Chrome
859A Satin Nickel
858AMX Matte Black NEW

30" L.
856A Chrome
857A Satin Nickel
856AMX Matte Black

48" L.
896 Chrome
897 Satin Nickel
896MX Matte Black NEW

24" L.
854 Chrome
855 Satin Nickel
854MX Matte Black
854W Matte White NEW

42" L.
858 Chrome
859 Satin Nickel
858MX Matte Black
858W Matte White NEW

18" L.
852 Chrome
853 Satin Nickel
852MX Matte Black
852W Matte White NEW

36" L.
856 Chrome
857 Satin Nickel
856MX Matte Black
856W Matte White NEW

12" L.
850 Chrome
851 Satin Nickel
850MX Matte Black
850W Matte White NEW



Residential Grip Bars

Slimmer profile for residential installation
Stainless Steel
⅞" dia. tubing

24" L.
888 Chrome
889 Satin Nickel

18" L.
886 Chrome
887 Satin Nickel

12" L.
883 Chrome
884 Satin Nickel

ELEVATE

Fashion Grab Bars

GATCO Grab Bars meet all Americans with Disabilities Act (ADA) & ASTM guidelines
Universal fastening system
Compatible with 45° installation
Stainless Steel
1¼" dia. tubing

Matches ELEVATE Bath Accessories See page 29



54" L. NEW
948A Chrome
958A Satin Nickel
948AMX Matte Black

30" L. NEW
946A Chrome
956A Satin Nickel
946AMX Matte Black

48" L. NEW
996A Chrome
997A Satin Nickel
996AMX Matte Black

24" L.
944 Chrome
954 Satin Nickel
944MX Matte Black NEW
944W Matte White NEW

42" L.
948 Chrome
958 Satin Nickel
948MX Matte Black NEW

18" L.
942 Chrome
952 Satin Nickel
942MX Matte Black NEW
942W Matte White NEW

36" L.
946 Chrome
956 Satin Nickel
946MX Matte Black NEW

12" L.
940 Chrome
950 Satin Nickel
940MX Matte Black NEW



All designs are patented and the exclusive property of GATCO®, Inc.

GLAM

Fashion Grab Bars

GATCO Grab Bars meet all Americans with Disabilities Act (ADA) & ASTM guidelines
Universal fastening system
Compatible with 45° installation
Stainless Steel
1¼" dia. tubing



Matches GLAM Bath Accessories
See page 11

54" L. NEW

968A	Chrome
978A	Satin Nickel
968AMX	Matte Black

48" L. NEW

986A	Chrome
987A	Satin Nickel
986AMX	Matte Black

42" L.

968	Chrome
978	Satin Nickel
968MX	Matte Black NEW

36" L.

966	Chrome
976	Satin Nickel
966MX	Matte Black NEW

30" L. NEW

966A	Chrome
976A	Satin Nickel
966AMX	Matte Black

24" L.

964	Chrome
974	Satin Nickel
964MX	Matte Black NEW
964W	Matte White NEW

18" L.

962	Chrome
972	Satin Nickel
962MX	Matte Black NEW
962W	Matte White NEW

12" L.

960	Chrome
970	Satin Nickel
960MX	Matte Black NEW





NEW GIBSON

Fashion Grab Bars

GATCO Grab Bars meet all Americans with Disabilities Act (ADA) & ASTM guidelines
Universal fastening system
Compatible with 45° installation
Stainless Steel
1¼" dia. tubing



Matches GIBSON Bath Accessories
See page 7

36" L.

624C	Chrome
624SN	Satin Nickel
624MX	Matte Black

24" L.

622C	Chrome
622SN	Satin Nickel
622MX	Matte Black

18" L.

621C	Chrome
621SN	Satin Nickel
621MX	Matte Black

NEW GLAM TOO



Matches GLAM TOO Bath Accessories
See page 9



Fashion Grab Bars

GATCO Grab Bars meet all Americans with Disabilities Act (ADA) & ASTM guidelines
Universal fastening system
Compatible with 45° installation
Stainless Steel
1¼" dia. tubing

36" L.		24" L.		18" L.	
664C	Chrome	**662C**	Chrome	**661C**	Chrome
664SN	Satin Nickel	**662SN**	Satin Nickel	**661SN**	Satin Nickel
664MX	Matte Black	**662MX**	Matte Black	**661MX**	Matte Black

NEW LOCKE

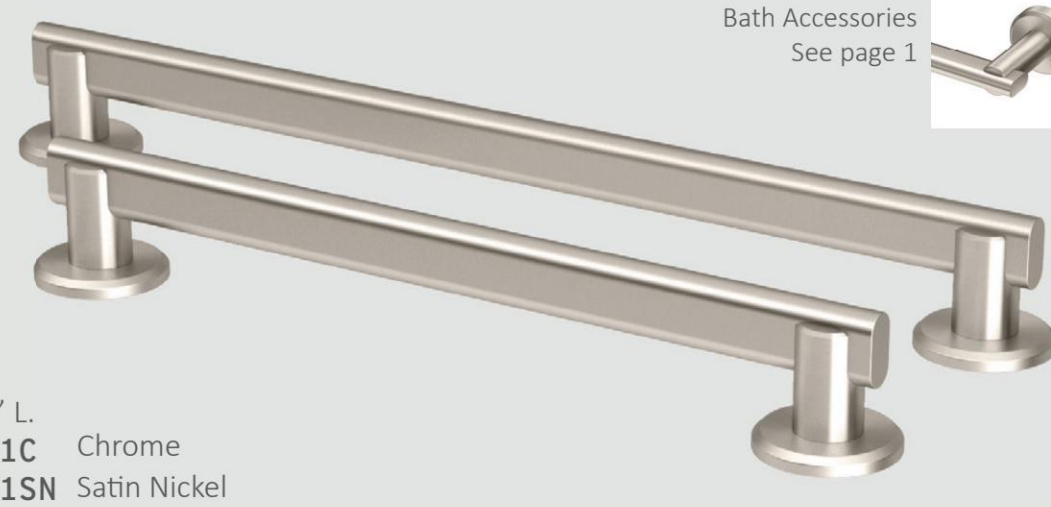

Matches LOCKE Bath Accessories
See page 1

Fashion Grab Bars

GATCO Grab Bars meet all Americans with Disabilities Act (ADA) & ASTM guidelines
Universal fastening system
Compatible with 45° installation
Stainless Steel
Oval tubing

36" L.		24" L.		18" L.	
654C	Chrome	**652C**	Chrome	**651C**	Chrome
654SN	Satin Nickel	**652SN**	Satin Nickel	**651SN**	Satin Nickel
654MX	Matte Black	**652MX**	Matte Black	**651MX**	Matte Black

NEW NOUVEAU



Fashion Grab Bars

GATCO Grab Bars meet all Americans with Disabilities Act (ADA) & ASTM guidelines
Stainless Steel
Universal fastening system
Compatible with 45° installation
Oval tubing

36" L.		24" L.		18" L.	
674C	Chrome	**672C**	Chrome	**671C**	Chrome
674SN	Satin Nickel	**672SN**	Satin Nickel	**671SN**	Satin Nickel
674MX	Matte Black	**672MX**	Matte Black	**671MX**	Matte Black

NEW TAVERN

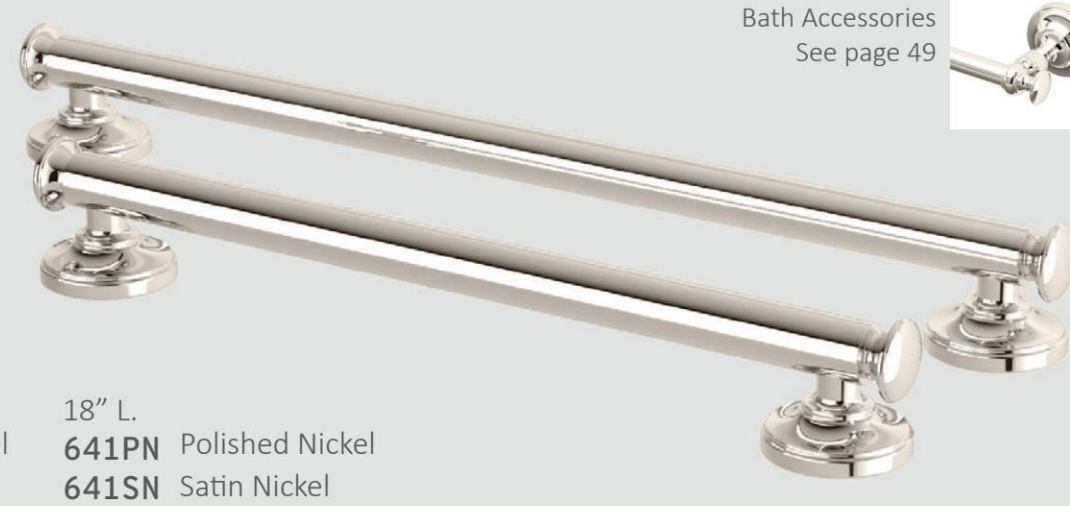

Matches TAVERN Bath Accessories
See page 49

Fashion Grab Bars

GATCO Grab Bars meet all Americans with Disabilities Act (ADA) & ASTM guidelines
Universal fastening system
Compatible with 45° installation
Stainless Steel
1¼" dia. tubing

36" L.		24" L.		18" L.	
644PN	Polished Nickel	**642PN**	Polished Nickel	**641PN**	Polished Nickel
644SN	Satin Nickel	**642SN**	Satin Nickel	**641SN**	Satin Nickel
644MX	Matte Black	**642MX**	Matte Black	**641MX**	Matte Black

All designs are patented and the exclusive property of GATCO®, Inc.



SHOWER essentials



Casual Shower Rod and Ends Set

1” dia. tubing, 6 FT L.

819	Chrome
820	Bronze
821	Satin Nickel
819MX	Matte Black



- **SOLID BRASS** construction
- Curtain rings not included



Modern Shower Rod
1” dia. tubing, 60" L.



829C Chrome
829SN Satin Nickel
829MX Matte Black

- **SOLID BRASS** construction
- Curtain rings not included

Modern Curved Shower Rod
1” dia. tubing



827C Chrome
827SN Satin Nickel
827MX Matte Black

- Stainless Steel
- Expands space by up to 8 in.
- Length adjusts between 42”- 72”
- Curtain rings not included





Classic Curved Shower Rod
1” dia. tubing



825 Chrome
826 Satin Nickel
825MX Matte Black

- Stainless Steel
- Expands space by up to 8 in.
- Length adjusts between 42”- 72”
- Curtain rings not included

All designs are patented and the exclusive property of GATCO®, Inc.

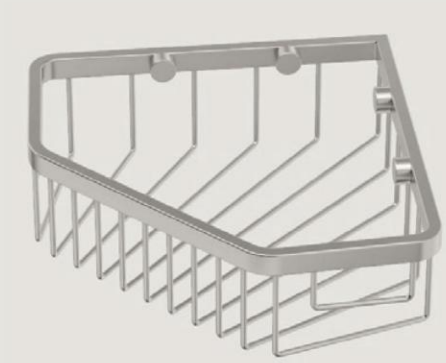

Corner Shower Basket
Stainless Steel
with concealed mounting
8½" W.
1499 Chrome
1515 Satin Nickel



Corner Shower Basket
Stainless Steel
with concealed mounting
10" H., 8½" W.
1475 Chrome



Corner Shower Baskets
Stainless Steel
with concealed mounting
9¼" W.
1497 Chrome
1514 Satin Nickel
1497MX Matte Black
7" W.
1495 Chrome
1513 Satin Nickel
1495MX Matte Black



Corner Shower Basket
Stainless Steel
with concealed mounting
12" W.
1570 Chrome
1571 Satin Nickel

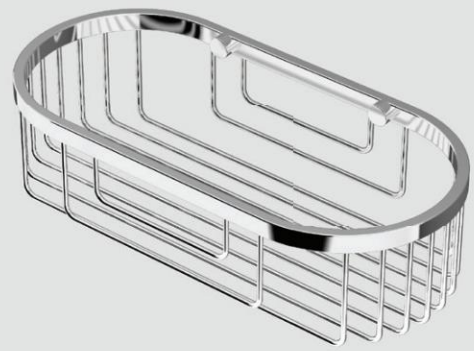

Oval Shower Basket
Stainless Steel
with concealed mounting
9¾" W.
1576 Chrome
1577 Satin Nickel



Elegant Shower Shelves
Stainless Steel
with concealed mounting
19" L.
1460 Chrome
1461 Brushed
10" L.
1467 Chrome
1468 Brushed

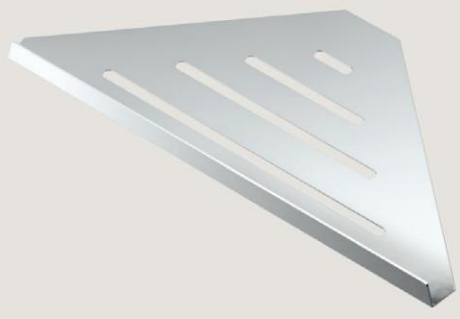

Elegant Corner Shelves
Stainless Steel
with concealed mounting
13" L.
1463 Chrome
1464 Brushed
9" L.
1470 Chrome
1471 Brushed

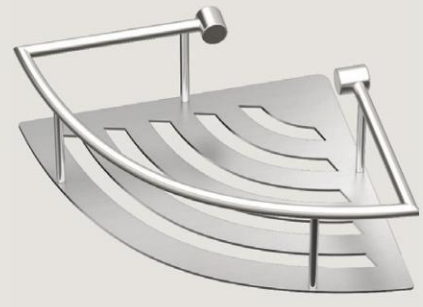

Elegant Corner Shelves
Stainless Steel
with concealed mounting
11" L.
1455 Chrome
1456 Brushed
8" L.
1452 Chrome
1453 Brushed

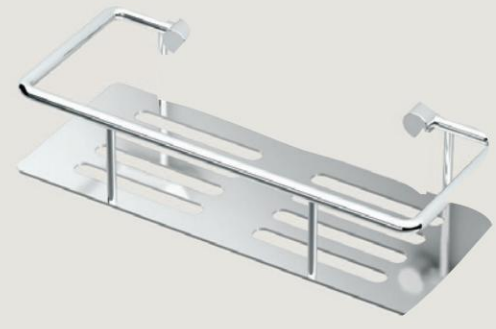

Elegant Shower Shelf
Stainless Steel with concealed mounting
10" L.
1432 Chrome
1433 Brushed

COUNTERTOP
essentials





Kitchen Paper Towel Stand
Solid Brass construction
6½" dia.,13½" H.

1447	Chrome	
1447MX	Matte Black	
1447B	Brushed Brass	NEW
1447MXB	Brushed Brass & Matte Black	NEW



Matches LATITUDE² Bath Accessories
See page 17



Countertop 2-Arm Pivot Hand Towel Holder
12" H.

1472C	Chrome
1472SN	Satin Nickel



Countertop S-Towel Holder
14¼" H.

1546	Chrome	
1547	Satin Nickel	
1545BZ	Bronze	
1546MX	Matte Black	
1546PN	Polished Nickel	NEW



Countertop Hand Towel Holder
11⅛" H.

1444C	Chrome	
1444SN	Satin Nickel	
1444MX	Matte Black	
1444B	Brushed Brass	
1444PN	Polished Nickel	
1444W	Matte White	NEW
1444MXB	Brushed Brass & Matte Black	NEW

NEW



Countertop Hand Towel Holder
11⅛" H.

1344C	Chrome & Crystal Clear Acrylic
1344SN	Satin Nickel & Crystal Clear Acrylic
1344B	Brushed Brass & Crystal Clear Acrylic
1344PN	Polished Nickel & Crystal Clear Acrylic

All designs are patented and the exclusive property of GATCO®, Inc.

FREESTANDING

essentials

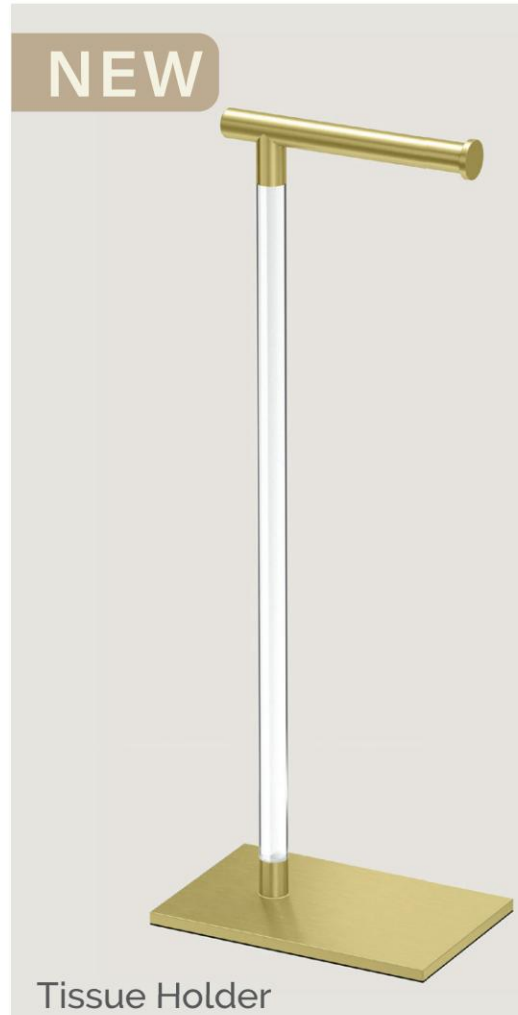

Tissue Holder
with Crystal Clear Acrylic®
21¼" H.

1331C	Chrome
1331SN	Satin Nickel
1331B	Brushed Brass
1331PN	Polished Nickel



Tissue Holder

21¼" H.

1431C	Chrome
1431SN	Satin Nickel
1431MX	Matte Black
1431B	Brushed Brass
1431W	Matte White NEW
1431PN	Polished Nickel NEW
1431MXB	Brushed Brass & Matte Black NEW



Tissue Holder with Storage

21⅛" H.

Holds up to 4 tissue rolls

1443C	Chrome
1443SN	Satin Nickel
1443B	Brushed Brass



Tissue Holder

23⅝" H.

1435C	Chrome
1435SN	Satin Nickel
1435BZ	Bronze
1435PN	Polished Nickel NEW



Matches LATITUDE² Bath Accessories
See page 17

Tissue Holder

22¼" H.

1437C	Chrome
1437SN	Satin Nickel
1437MX	Matte Black
1437PN	Polished Nickel NEW



Tissue Holder with Storage

22¼" H.

Holds up to 4 tissue rolls

1448C	Chrome
1448SN	Satin Nickel



Tissue Holder

22" H.

1436C	Chrome
1436SN	Satin Nickel
1436MX	Matte Black
1436BZ	Bronze
1436	Polished Brass
1436PN	Polished Nickel NEW
1436MXB	Brushed Brass & Matte Black NEW

All designs are patented and the exclusive property of GATCO®, Inc.

SQUARE



Elegant Square Toilet Brush Holder

Stainless Steel
14⅝" H.

1488	Chrome
1489	Satin Nickel
1488MX	Matte Black
1488W	Matte White NEW
1488B	Gold NEW

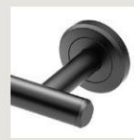

Matches LATITUDE[2] Bath Accessories
See page 17



Slender Brush Holder

Stainless Steel
15" H., 3⅛" dia.

1481	Chrome
1482	Satin Nickel
1481MX	Matte Black
1481W	Matte White NEW
1481B	Gold NEW



Toilet Brush Holder

16" H.

1484	Chrome
1485	Satin Nickel





Décor Bath Towel Holder

31½" H.

1520MX	Matte Black



S-Style Towel Holder

38" H.

1505	Chrome
1506	Satin Nickel
1508	Bronze
1505MX	Matte Black
1505PN	Polished Nickel NEW



Modern Floor Towel Holder

32½" H.

1552C	Chrome
1552SN	Satin Nickel
1552MX	Matte Black
1552PN	Polished Nickel NEW



3-Tier Rectangle Taboret

28¼" H.

1351	Chrome
1352	Satin Nickel
1351PN	Polished Nickel NEW



Rectangle Vanity Stool

14¼"W., 19½" H., 11⅓"D.

1356	Chrome
1357	Satin Nickel

RECTANGLE



Oval Vanity Stool

18"W., 19½" H., 14"D.

1358	Chrome
1359	Satin Nickel

OVAL

all modern
DÉCOR HOOKS



GLAMOUR
All Modern Décor Hooks

Triple 11" L.		Double 6½" L.	
1282	Chrome	**1281**	Chrome
1286	Satin Nickel	**1285**	Satin Nickel
1282MX	Matte Black	**1281MX**	Matte Black
1282B	Brushed Brass (Solid Brass)	**1281B**	Brushed Brass (Solid Brass)



Matches GLAM
Bath Accessories
See page 11



GLAM
All Modern Décor Hooks

Triple 11" L.		Double 6½" L.	
1288	Chrome	**1284**	Chrome
1288SN	Satin Nickel	**1284SN**	Satin Nickel
1288MX	Matte Black	**1284MX**	Matte Black
1288B	Brushed Brass (Solid Brass)	**1284B**	Brushed Brass (Solid Brass)



Matches GLAM
Bath Accessories
See page 11



Matches LATITUDE²
Bath Accessories
See page 17



LATITUDE²
All Modern Décor Hooks

Triple 11" L.		Double 6½" L.	
1292	Chrome	**1291**	Chrome
1296	Satin Nickel	**1295**	Satin Nickel
1292MX	Matte Black	**1291MX**	Matte Black
1292B	Brushed Brass (Solid Brass)	**1291B**	Brushed Brass (Solid Brass)
1292MXB	Brushed Brass & Matte Black	**1291MXB**	Brushed Brass & Matte Black



Matches ELEVATE
Bath Accessories
See page 29



ELEVATE
All Modern Décor Hooks

Triple 11" L.		Double 6½" L.	
1287	Chrome	**1283**	Chrome
1287SN	Satin Nickel	**1283SN**	Satin Nickel
1287MX	Matte Black	**1283MX**	Matte Black
1287B	Brushed Brass (Solid Brass)	**1283B**	Brushed Brass (Solid Brass)

All designs are patented and the exclusive property of GATCO®, Inc.

S P A
e s s e n t i a l s

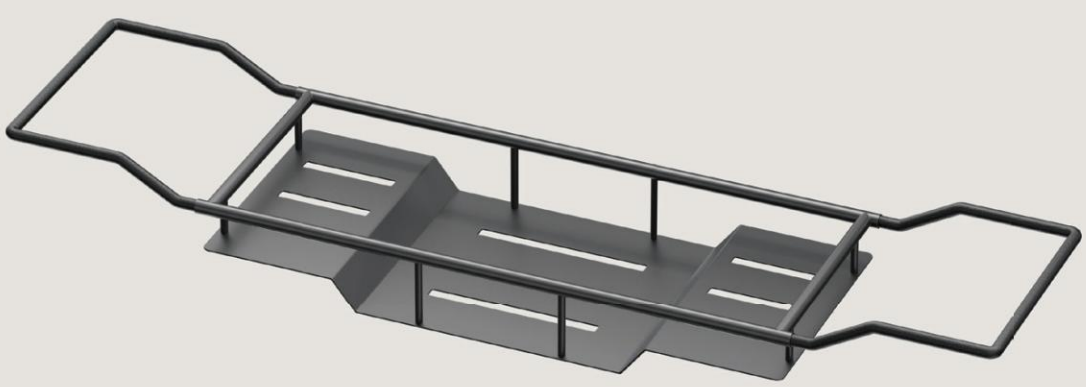

Modern Bath Tub Caddy
Stainless Steel
28” - 37” W. adjustable
1418C Chrome
1418MX Matte Black

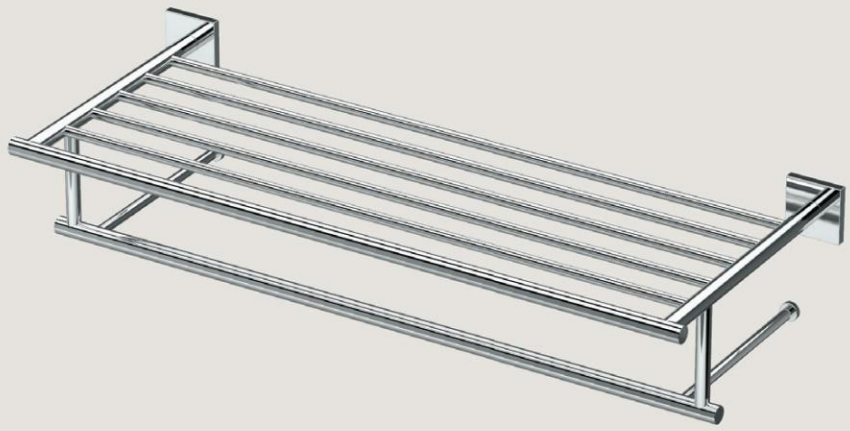

Minimalist Towel Rack
Stainless Steel
25¾" L., 5¼" H.

4057 Chrome
4077 Satin Nickel



Matches ELEVATE
Bath Accessories
See page 29

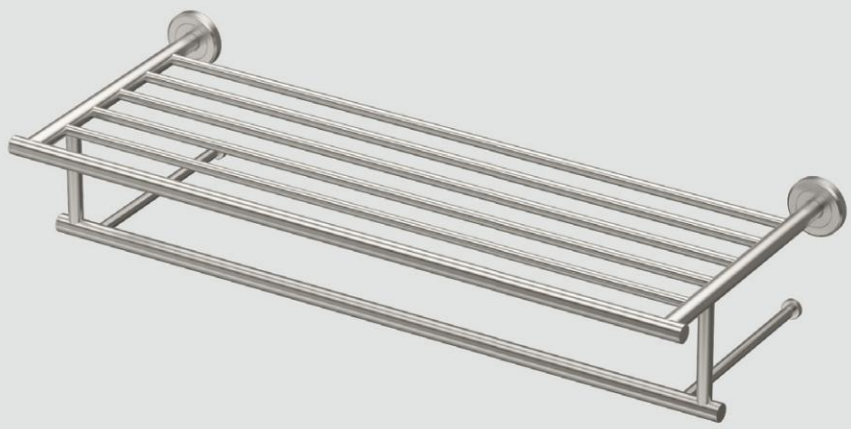

Minimalist Towel Rack
Stainless Steel
25¾" L., 5¼" H.

4247 Chrome
4297 Satin Nickel
4247MX Matte Black



Matches LATITUDE²
Bath Accessories
See page 17

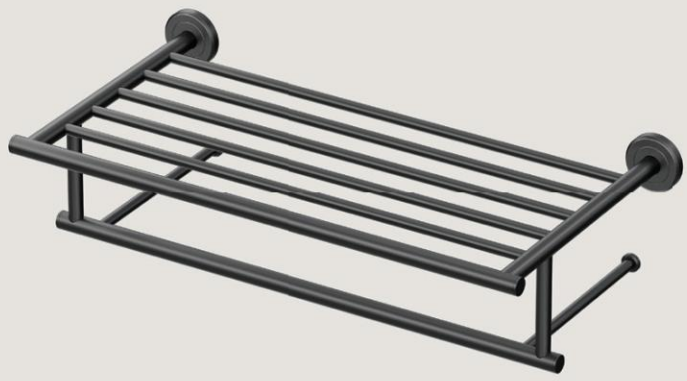

Minimalist Towel Rack
Stainless Steel
19¾" L., 5¼" H.

1818C Chrome
1818SN Satin Nickel
1818MX Matte Black



Matches LATITUDE²
Bath Accessories
See page 17

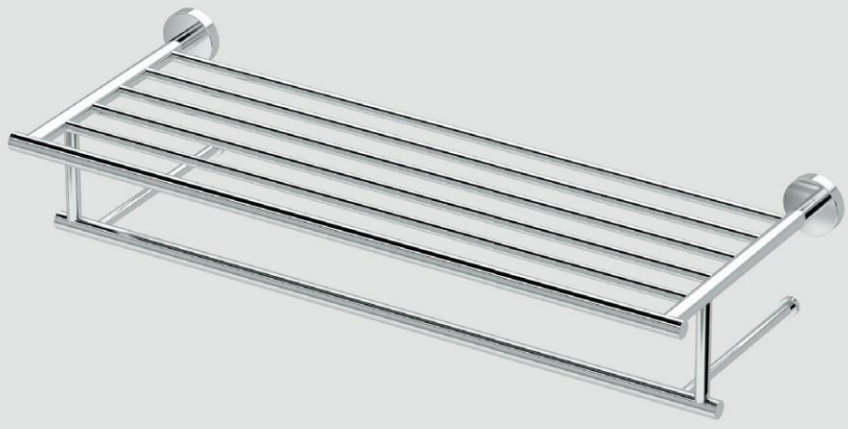

Minimalist Towel Rack
Stainless Steel
25¾" L., 5¼" H.

4637 Chrome
4647 Satin Nickel



Matches GLAM
Bath Accessories
See page 11

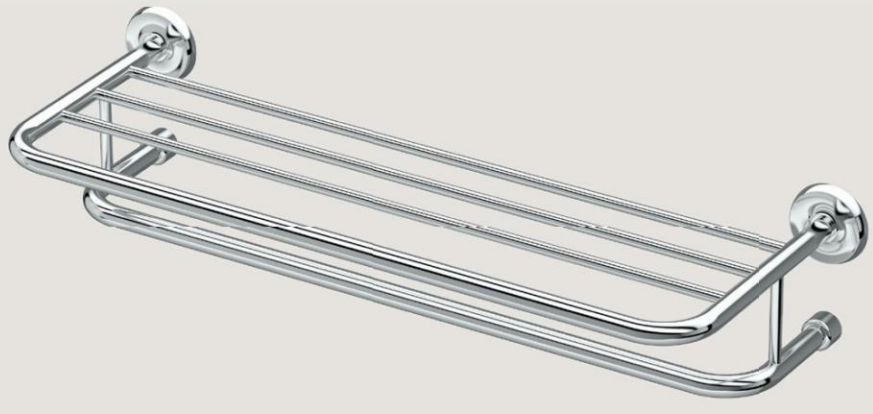

Spa Towel Rack
Stainless Steel
26½" L., 5⅜" H.

5376 Chrome
5378 Satin Nickel



Matches DESIGNER II
Bath Accessories
See page 55

All designs are patented and the exclusive property of GATCO®, Inc.

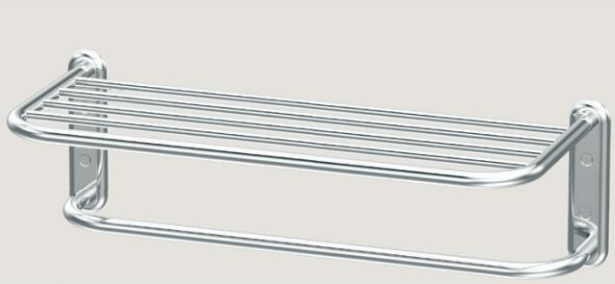

Spa Rack
Stainless Steel
21½" L., 6½" H.
1537 Chrome



Spa Rack
Stainless Steel
21⅝" L., 10" H.
1541 Chrome
1541SN Satin Nickel



Spa Rack
Stainless Steel
23"L.
1544 Chrome

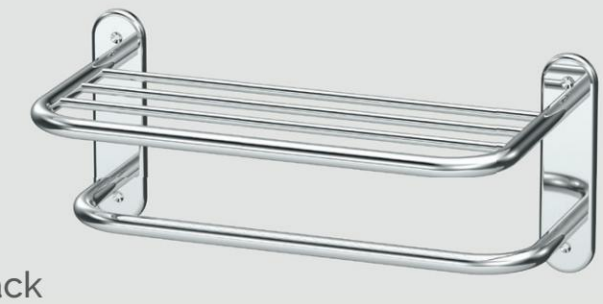

Spa Rack
Stainless Steel
20⅓" L., 8½" H.
1532 Chrome

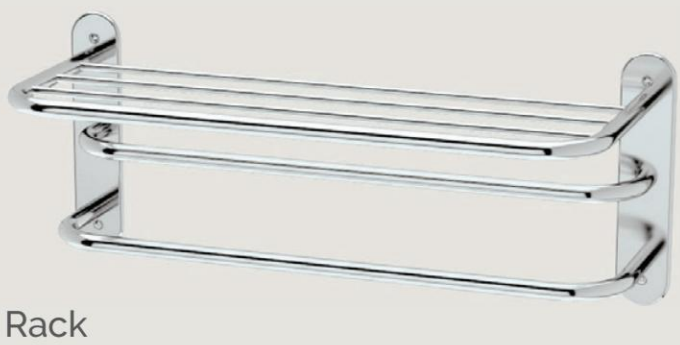

Spa Rack
Stainless Steel
26⅓" L., 10½" H.
1534 Chrome

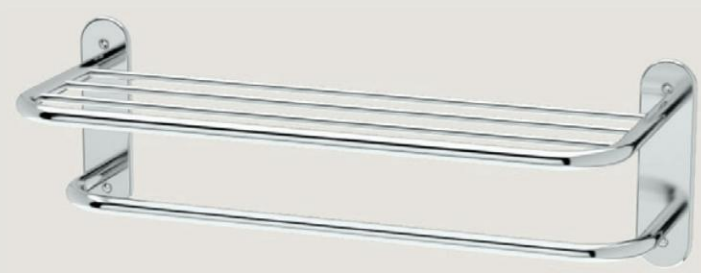

Spa Rack
Stainless Steel
26⅓" L., 8½" H.
1531 Chrome



MORE essentials



Minimalist Tissue Holder with Mobile Shelf

7" W., 4"D.

1420	Chrome
1420SN	Satin Nickel
1420MX	Matte Black
1420B	Brushed Brass
1420MXB	Brushed Brass & Matte Black NEW

NEW

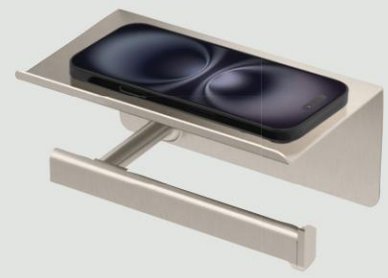

Matches ELEVATE Bath Accessories
See page 29



Minimalist Tissue Holder with Mobile Shelf

7" W., 4"D.

1422	Chrome
1422SN	Satin Nickel
1422MX	Matte Black

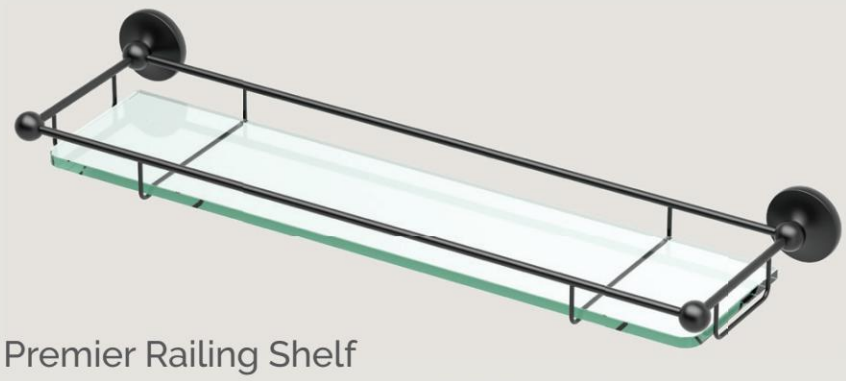

Premier Railing Shelf

Solid Brass construction
20" L., 6" D.

1465	Chrome
1465MX	Matte Black

NEW



Recessed Tissue Holder with Pivoting Arm

Mounting hardware included
6⅜" sq., 3⅜" D.

750	Chrome
751	Satin Nickel
752	Matte Black
753	Brushed Brass
754	Matte White
755	Polished Nickel



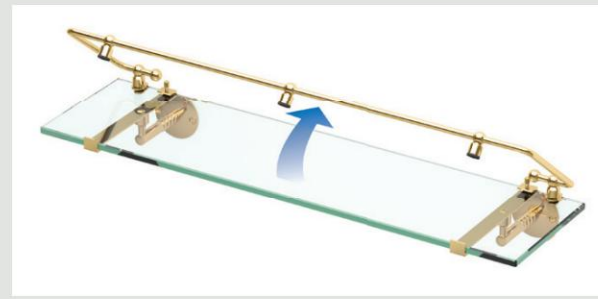

Premier Railing Shelf

Solid Brass construction
21" L., 5¼ D.

1438C	Chrome
1438SN	Satin Nickel
1438	Polished Brass





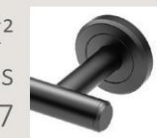

Matches LATITUDE²
Bath Accessories
See page 17

Minimalist Paper Towel Holder

15½" L.

1433C	Chrome
1433SN	Satin Nickel
1433MX	Matte Black

All designs are patented and the exclusive property of GATCO®, Inc.



LIGHTING
essentials

All GATCO sconces are UL listed
and require medium base bulb(s)

Sconces may be mounted upward or downward

LATITUDE²



See page 17
for more



Triple Sconce
19⅝" L.

1686	Chrome
1687	Satin Nickel
1686MX	Matte Black
1688	Bright Brushed Brass

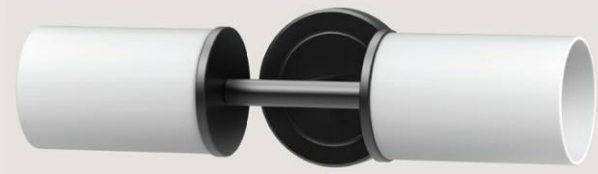

Double Sconce
15⅞" L.

1683	Chrome
1684	Satin Nickel
1683MX	Matte Black



Single Sconce
4½" L.

1680	Chrome
1681	Satin Nickel
1680MX	Matte Black
1682	Bright Brushed Brass

GLAM



See page 11
for more



Triple Sconce
19½" L.

1636	Chrome
1637	Satin Nickel
1636MX	Matte Black



Double Sconce
12⅝" L.

1633	Chrome
1634	Satin Nickel
1633MX	Matte Black



Single Sconce
5" L.

1630	Chrome
1631	Satin Nickel
1630MX	Matte Black

All designs are patented and the exclusive property of GATCO®, Inc.

MODERN FARMHOUSE



See page 17
for more



Triple Sconce
19⅝" L.

1705 Chrome
1706 Satin Nickel
1705MX Matte Black
1707 Bright Brushed Brass

Single Sconce
4½" L.



1700 Chrome
1701 Satin Nickel
1700MX Matte Black
1702 Bright Brushed Brass

DESIGNER II



See page 55
for more



Triple Sconce
20½"L.

1646 Chrome



Single Sconce
4½"L.

1640 Chrome

CAFÉ



See page 53
for more



Double Sconce
16"L.

1613 Chrome
1615 Bronze



Single Sconce
7" L.

1610 Chrome
1612 Bronze

TAVERN



See page 49
for more



Triple Sconce
20" L.

1626 Polished Nickel
1627 Satin Nickel



Single Sconce
4¾" L.

1620 Polished Nickel
1621 Satin Nickel



MODERN FARMHOUSE RETRO

Edison light bulb(s) included



Double Sconce

15⅞" W.

1720 Chrome
1721 Satin Nickel
1722 Matte Black
1723 Bright Brushed Brass
1724 Matte Black & Bright Brushed Brass



Single Sconce

7" W.

1710 Chrome
1711 Satin Nickel
1712 Matte Black
1713 Bright Brushed Brass
1714 Matte Black & Bright Brushed Brass

All designs are patented and the exclusive property of GATCO®, Inc.


EO
HAND
soap



Extra Large Rectangle
Can be mounted landscape or portrait
1804 27½" W. × 35½" H.





Large Rectangle
Can be mounted landscape or portrait
1802 23½" W. × 31½" H.



Rectangle
Can be mounted landscape or portrait
1803 19½" W. × 24" H.

FLUSH MOUNT MIRRORS



Large Oval
1801 24" W. × 32" H.



Oval
1800 19½" W. × 26½" H.



Large Round
1807 35" dia.



Round
1806 24½" dia.

All designs are patented and the exclusive property of GATCO®, Inc.





Faceted Mirror

24½" W. × 32½" H.

1528 Chrome





Large Rectangle

24½" W. × 32½" H. Can be mounted landscape or portrait

1822 Chrome
1832 Satin Nickel
1822MX Matte Black



Rectangle

20½" W. × 25" H. Can be mounted landscape or portrait

1823 Chrome
1833 Satin Nickel
1823MX Matte Black



Large Oval

25" W. × 33" H.

1821 Chrome
1831 Satin Nickel
1821MX Matte Black



Oval

20½" W. × 27½" H.

1820 Chrome
1830 Satin Nickel
1820MX Matte Black

All designs are patented and the exclusive property of GATCO®, Inc.



FIXED MOUNT MIRRORS





LATITUDE²

Can be mounted
landscape or portrait

22" W. × 30" H.

1561	Chrome
1562	Satin Nickel
1561MX	Matte Black

See page 17 for matching bath accessories





ELEVATE

Can be mounted
landscape or portrait

22" W. × 30" H.

1595	Chrome
1596	Satin Nickel
1595MX	Matte Black

See page 29 for matching bath accessories



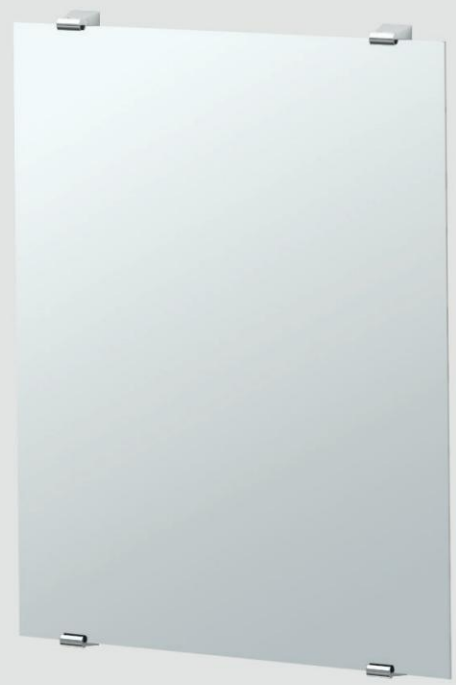

BLEU

Can be mounted
landscape or portrait

22" W. × 30" H.

1563	Chrome
1564	Satin Nickel
1563MX	Matte Black

See page 41 for matching bath accessories





Can be mounted
landscape or portrait

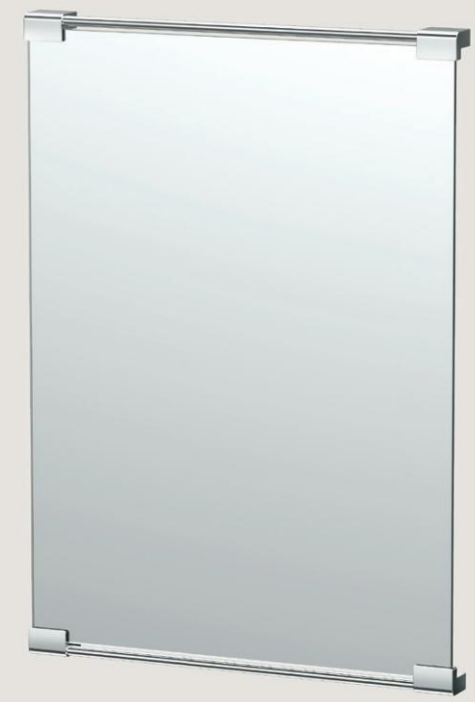

DÉCOR

22" W. × 30" H.		19½"W. × 24" H.	
1521	Chrome	**1523**	Chrome
1522	Satin Nickel	**1524**	Satin Nickel
1521MX	Matte Black	**1523MX**	Matte Black

The dimensions reflect the size of the mirror, and do not include the mounting brackets



PIVOTING MIRRORS

beveled frameless mirrors

More pivoting mirrors found in each collection section

CHARLOTTE

PIVOTS



Frameless
Large Rectangle
23½" W. × 31½" H.
4359S Chrome
4369S Satin Nickel



Frameless Rectangle
19½" W. × 24" H.
4359SM Chrome
4369SM Satin Nickel



Frameless
Large Oval
24" W. × 32" H.
4359LG Chrome
4369LG Satin Nickel

Frameless Oval
19½" W. × 26½" H.
4359 Chrome
4369 Satin Nickel

JEWEL

PIVOTS



Frameless
Large Rectangle
23½" W. × 31½" H.
4149S Chrome
4159S Satin Nickel



Frameless Rectangle
19½" W. × 24" H.
4149SM Chrome
4159SM Satin Nickel



Frameless
Large Oval
24" W. × 32" H.
4149LG Chrome
4159LG Satin Nickel

Frameless Oval
19½" W. × 26½" H.
4149 Chrome
4159 Satin Nickel

TIARA

PIVOTS



Frameless
Large Rectangle
23½" W. × 31½" H.
4329S Chrome
4339S Satin Nickel



Frameless Rectangle
19½" W. × 24" H.
4329SM Chrome
4339SM Satin Nickel



Frameless
Large Oval
24" W. × 32" H.
4329LG Chrome
4339LG Satin Nickel

Frameless Oval
19½" W. × 26½" H.
4329 Chrome
4339 Satin Nickel

The dimensions reflect the size of the mirror, and do not include the mounting brackets


citizenPM
citizenAM

COSMETIC MIRROR essentials

all cosmetic mirrors pivot

PIVOTS



Table Mirror
Solid Brass construction
3x Magnification on one side
8¾" H. 7½" dia.

1391MX Matte Black



Accordion Mirror
Solid Brass construction
3x Magnification on one side
7½" dia.
Arm fully extended 24" L. Closed 4" L.

1439C Chrome
1439SN Satin Nickel



Swing Arm Mirror
Solid Brass construction
3x Magnification on one side
7½" dia.
Arm fully extended 12⅝" L.

1411 Chrome
1408 Satin Nickel
1410 Polished Brass



Matches LATITUDE²
Bath Accessories
See page 17



Table Mirror
3x Magnification on one side
12½" H. 6¾" dia.

1386C Chrome
1386SN Satin Nickel
1386MX Matte Black



Table Mirror
Solid Brass construction
3x Magnification on one side
9¾" W., 12" H., 3½ D.

1381 Chrome
1382 Satin Nickel

All designs are patented and the exclusive property of GATCO®, Inc.

GATCO, INC.
1550 Factor Ave.
San Leandro, CA 94577
P: 800.227.5640
cs@gatcoinc.com
www.gatcoinc.com

NKBA
NATIONAL
KITCHEN+BATH
ASSOCIATION